KENWOOD

VHF/UHF Desktop Repeater

TKR-720(N)/820(N)

- ***Synthesized design for rapid set-up and reliable performance***
- ***Adjustable power output suitable for small- to medium-sized applications***
- ***High performance receiver works equally well in urban, suburban and rural areas***
- ***Field programmable Quiet Talk (QT) and Digital Quiet Talk (DQT) signaling systems***
- ***Compact packaging for desktop operation***
- ***Die-Cast Chassis and Large Heatsink provide a stable foundation for heavy duty-cycle use***
- ***Modular design isolates receiver and transmitter sections for maximum reliability and shielding***

Advanced synthesized RF design means the TKR-720(N)/820(N) is easy to program and reconfigure as necessary, utilizing E²PROM technology, so you have both flexibility and reliability combined in a compact, attractive package. In addition, **the temperature compensated crystal oscillator (TCXO)** provides the utmost in frequency accuracy and stability.

The **adjustable RF power output** delivers just the right amount of coverage for your requirements. It can be configured with low power for small industrial plants on UHF [TKR-820(N)] or high power on VHF [TKR-720(N)] to cover an entire valley in the remote wilderness. Your technician can program the UHF power from 2 to 25 watts, and the VHF power from 15 to 50 watts.

The TKR-720(N)/820(N) desktop repeater provides a quality solution for any small to medium-sized RF communications system, whether it's busy downtown in 'intermod alley' or working a lumber yard in the suburbs. The rugged, compact design utilizing advanced synthesized RF technology lets you build a quality system that users can depend on around the clock.

The **high-performance receiver** has excellent sensitivity, selectivity, intermodulation and spurious/image rejection specifications so you can operate the unit equally well in both RF-congested urban areas and wide open rural settings.

The **Quiet Talk (QT) and Digital Quiet Talk (DQT)** signaling systems allow you to operate up to 8 tones, including cross tone or cross code. And because users only hear traffic relevant to their job, productivity and overall system effectiveness goes up.

The **compact desktop design** means that you do not have to create special rooms with environmental controls — the TKR-720(N)/820(N) is equally at home on a working desktop at the center of the action or in a dedicated communications equipment room.

The **die-cast chassis** and **large heatsink** keeps the circuitry well-protected from physical abuse and enables long operating hours. And if the AC power goes down, the optional **DC auto-revert** feature keeps your communications system up until technical help arrives.

Inside, the **modular design** carries the dependability factor even further, separating the receiver and transmitter circuits for optimal shielding and isolation.

Options

KPT-50
Field Programming Unit
(stand-alone)

KCT-11
Duplexer Installation Kit
[TKR-720(N) — for internal installation of a compact vehicle-style duplexer. Included with the TKR-820(N).]

DC auto-revert circuit modification parts
(See service manual for part numbers.)

Mounting bracket for 19" rack or surface mount
(See service manual for part numbers.)

** Not all accessories may be available, please contact dealers for details.*

Specifications

	TKR-720(N)	TKR-820(N)
GENERAL		
Frequency range	Type 1: 150 ~ 174 MHz Type 2: 136 ~ 150 MHz	Type 1: 450 ~ 470 MHz Type 2: 470 ~ 490 MHz Type 3: 490 ~ 512 MHz Type 4: 406 ~ 430 MHz
Number of channels	1	1
Channel spacing	15 kHz	12.5 kHz
Input voltage	120 V AC 50/60 Hz (Modifiable to DC back-up)	120 V AC 50/60 Hz (Modifiable to DC back-up)
Power Consumption	230 watts maximum	200 watts maximum
Duty cycle	50% at 50 watts output (100% at 15 watts output)	50% at 20 watts output (100% at 5 watts output)
Operating temperature range	-30° C ~ +60° C (-22° F ~ +140° F)	-30° C ~ -60° C (-22° F ~ +140° F)
Dimensions (W x H x D)	4-3/4 x 13 x 15 in. (120 x 330 x 383 mm)	4-3/4 x 13 x 15 in. (120 x 330 x 383 mm)
Weight (net)	28.66 lbs. (13 kg)	28.66 lbs. (13 kg)
FCC ID Type 1 Type 2 Type 3 Type 4	 ALH TKR-720N-1 ALH TKR-720N-2	 ALH TKR-820N-1 ALH TKR-820N-2 ALH TKR-820N-3 ALH TKR-820N-4
RECEIVER (Measurements made per EIA standard EIA-204-C)		
RF input impedance	50 Ω	50 Ω
Sensitivity: EIA 12 dB SINAD 20 dB quieting	 0.35 μV 0.45 μV	 0.35 μV 0.45 μV
Squelch sensitivity	0.2 μV threshold	0.2 μV threshold
Modulation acceptance	±3.5 kHz	±3.5 kHz
Selectivity	-80 dB	-75 dB
Intermodulation distortion	-75 dB	-70 dB
Spurious & image rejection	-90 dB	-85 dB
Frequency stability	±0.0005% (-30° C ~ +60° C)	±0.00025% (-30° C ~ +60° C)
Audio output	4 W (at 4 Ω, less than 5% distortion)	4 W (at 4 Ω, less than 5% distortion)
TRANSMITTER (Measurements made per EIA standard EIA-152-B)		
RF power output	50 watts adjustable to 15 watts (duplexer input)	25 watts adjustable to 2 watts (duplexer input)
RF output impedance	50 Ω	50 Ω
Spurious & harmonics	-80 dB	-70 dB
Modulation	F3E ±2.5 kHz for 100% at 1000 Hz Direct FM Modulation	F3E ±2.5 kHz for 100% at 1000 Hz Direct FM Modulation
FM noise	-44 dB	-44 dB
Microphone impedance	Low impedance	Low impedance
Audio distortion	Less than 3% at 1000 Hz	Less than 3% at 1000 Hz
Frequency stability	±0.00025% (-30° C ~ +60° C)	±0.00025% (-30° C ~ +60° C)
REPEATER CONTROL UNIT		
Signaling: Maximum number of tones	 8	 8
QT decoder/encoder Decoder/encoder tone frequency Decoder response time Squelch tail elimination time Encoder frequency error Sensitivity	 67.0 to 210.7 Hz (in 0.1 Hz steps) 200 msec. or less 100 msec ±0.05% or less SINAD 8 dB or less	 67.0 to 210.7 Hz (in 0.1 Hz steps) 200 msec. or less 100 msec ±0.05% or less SINAD 8 dB or less
DQT decoder/encoder DQT code Decoder response time Turn-off code transmission time Sensitivity	 23 bits total; a 3-digit octal number (0~7, 12 bits) with error correction (11 bits) 250 msec. or less 156 msec. SINAD 8 dB or less	 23 bits total; a 3-digit octal number (0~7, 12 bits) with error correction (11 bits) 250 msec. or less 156 msec. SINAD 8 dB or less
Time-out timer	Adjustable OFF, 30 sec. ~ 5 min.	Adjustable OFF, 30 sec. ~ 5 min.
Hang timer	Adjustable 0 ~ 5 sec.	Adjustable 0 ~ 5 sec.

Kenwood follows a policy of continuous advancement in development. For this reason specifications may be changed without notice.

This device has not been approved by the Federal Communications Commission. This device is not, and may not be, offered for sale or lease, or sold or leased until the approval of the FCC has been obtained.

ISO 9001
JQA-1205

Communications Equipment Division
Kenwood Corporation
ISO9001 certification

KENWOOD CORPORATION
14-6, 1-chome, Dogenzaka, Shibuya-ku, Tokyo 150-8501, Japan

KENWOOD COMMUNICATIONS CORPORATION
P.O. BOX 22745, 2201 East Dominguez St., Long Beach, CA 90801-5745, U.S.A.

KENWOOD ELECTRONICS CANADA INC.
6070 Kestrel Road, Mississauga, Ontario, Canada L5T 1S8

CL202KP-E-2(00) 981001B Printed in Japan

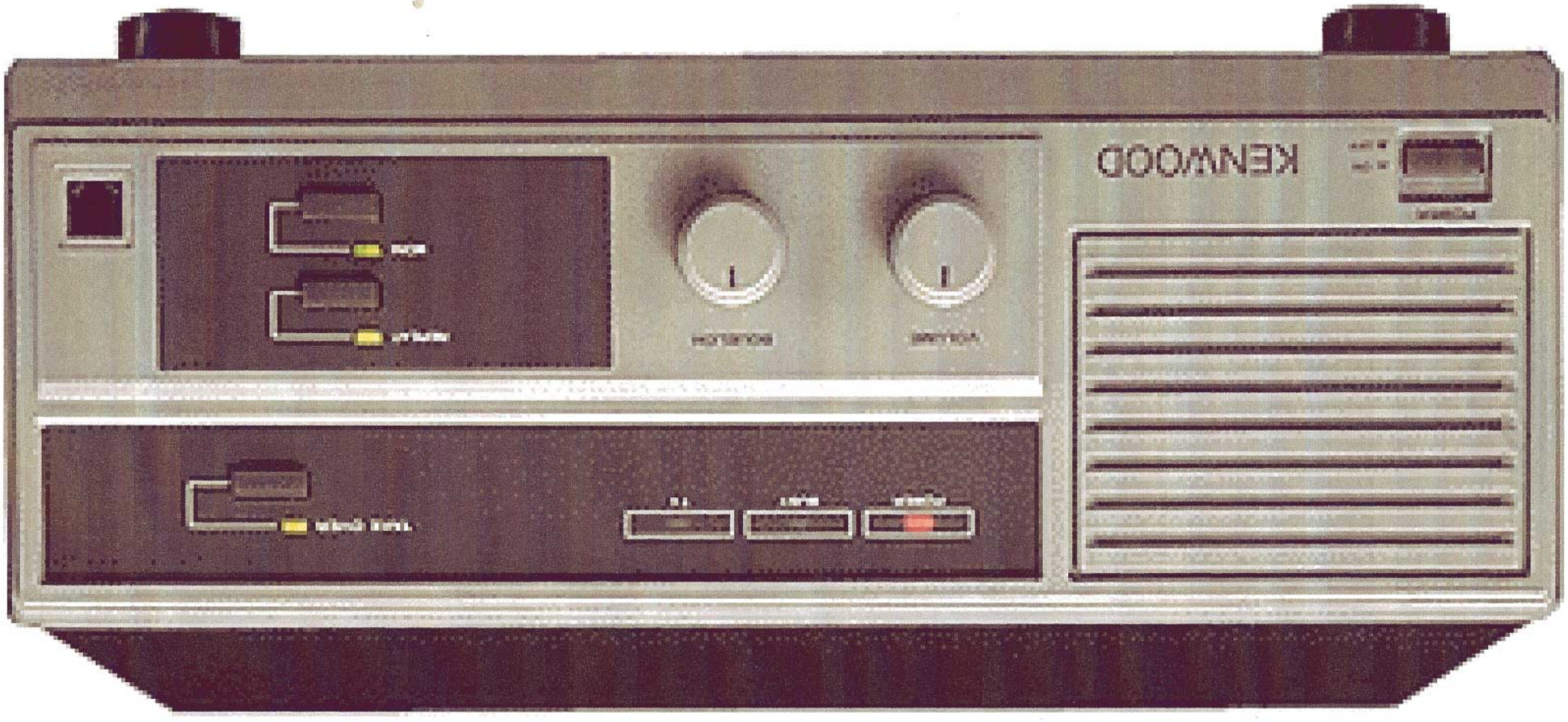
KENWOOD

VHF DESK-TOP REPEATER

TKR-720/N/A

SERVICE MANUAL

REVISED

KENWOOD

© 1994-7 PRINTED IN JAPAN
B51-8088-10(N)750

This service manual is the same as the service manual (B51-8088-00) for TKR-720 (K,M,K2,M2) destinations except that this manual contains new items for (TKR-720N : M,M2, TKR-720A : M,M2) destinations.
Use it together with the previous service manual (B51-8088-00).

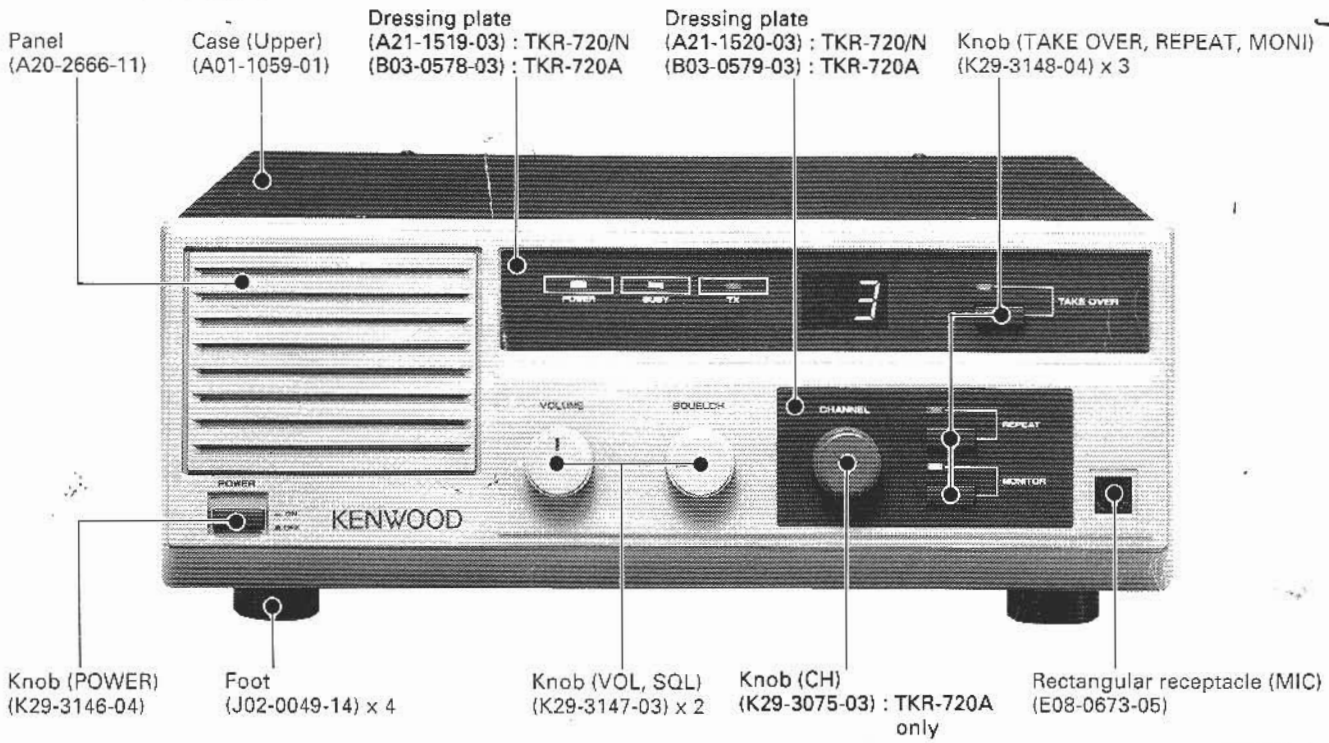

Photo is TKR-720A type.

CONTENTS

GENERAL 2
SYSTEM SET-UP 4
INSTALLATION 5
CONVERSION 8
DISASSEMBLY FOR REPAIR 11
BLOCK DIAGRAM 17
CIRCUIT DESCRIPTION 20
SEMICONDUCTOR DATA 28
DESCRIPTION OF COMPONENTS 35
PARTS LIST 37
EXPLODED VIEW 58
PACKING 60
ADJUSTMENT 61
PC BOARD VIEWS / CIRCUIT DIAGRAMS
RX PLL : Z1,TX PLL : Z4 (X58-3140-XX) 67
RX VCO : Z2 (X58-3290-XX) 68
TX VCO : Z5 (X58-3790-XX) 69
MIC AMP : Z7 (X59-3210-10) 70
IF : Z8 (X59-3220-10) 71
BPF/VCA : Z9 (X59-3230-10) 72
SIGNALING UNIT (X52-3140-10) 73
AVR UNIT (X43-3040-10) 76
DRIVE UNIT (X45-3310-XX) 77
FINAL UNIT (X45-3320-XX) 78
DISPLAY UNIT (X54-3070-XX) 79
TX-RX UNIT (X57-3760-XX) 81
SCHEMATIC DIAGRAM 83
TERMINAL FUNCTION 87
KMC-9 (BASE MICROPHONE) 89
SPECIFICATIONS ..... BACK COVER

GENERAL

INTRODUCTION

SCOPE OF THIS MANUAL

This manual is intended for use by experienced technicians familiar with similar types of commercial grade communications equipment. It contains all required service informations for the equipment and is current as of the publication date. Changes which may occur after publication are covered by either Service Bulletins of Manual Revisions. These are issued as required.

ORDERING REPLACEMENT PARTS

When ordering replacement parts or equipment information, the full part identification number should be included. This applies to all parts : components, kits, or chassis. If the part number is not known, include the chassis or kit number of which it is a part, and a sufficient description of the required component for proper identification.

PERSONNEL SAFETY

The following precautions are recommended for personnel safety :

- DO NOT transmit if someone is within two feet (0.6 meter) of the antenna.
- DO NOT transmit until all RF connectors are verified secure and any open connectors are properly terminated.
- SHUT OFF and DO NOT operate this equipment near electrical blasting caps or in an explosive atmosphere.
- All equipment should be properly grounded before power-up for safe operation.
- This equipment should be serviced by a qualified technician only.
- Be careful against electric hazard, for the commercial power supply is being applied to the internal circuitry of the radio even when the Power switch is OFF.

FCC COMPLIANCE AND TYPE NUMBERS

Type acceptance number	Frequency range	Compliance
ALHTKR-720-1	150 to 174MHz	Part 22, 74 and 90

1. POWER-UP

To push on the radio. The POWER indicator will illuminate to indicate power is ON.

2. TO RECEIVE

Operation	Procedure
1. Disable QT If so programmed.	Push on MONITOR switch.
2. Unsquelch radio	Turn SQUELCH control counter-clockwise until noise is heard.
3. Set VOLUME control	Adjust VOLUME control for a normal listening level.
4. Set SQUELCH control	Advance SQUELCH control clockwise until noise just stops.
The radio will now receive all traffic on the selected channel.	
5. Enable QT If so programmed.	Press the MONITOR switch to OFF.
You will now hear messages for your system only.	

3. TO TRANSMIT (In case a microphone is connected)

Operation	Procedure
1. Disable QT	Depress MONITOR switch on front panel or microphone.
2. LISTEN	DO NOT TRANSMIT if channel is in use.
3. Key transmitter	Press and hold the microphone PTT switch. The Red LED on the front panel will glow indicating the transmitter is ON.
4. Transmit message	Hold microphone at about 2 inches distance and speak at a normal voice level. Keep transmissions brief.
5. Receive reply	Release the microphone PTT switch.
6. Enable QT at end of the conversation If so programmed.	Depress MONITOR to the out position.

GENERAL

4. DURING OPERATION OF REPEATER

Operation	Procedure
1. Enable repeat	Press the REPEAT switch to ON.
2. Start of repeat	When a signal including the object tone signal (provided that it has been programmed) is input and if its level is higher than the preset squelch level, a signal modulated by the set tone signal (provided that it has been programmed) and received audio signal is transmitted.
3. End of repeat	When the received signal disappears, the transmission is stopped after the set period of time. There indicator lights while the signal is transmitted.
4. Disable repeat	Press the REPEAT switch again to OFF.

PRE-INSTALLATION CONSIDERATIONS

1. UNPACKING

Unpack the radio from its shipping container and check for accessory items. If any item is missing, please contact KENWOOD immediately.

2. LICENSING REQUIREMENTS

Federal regulations require a station license for each radio installation (mobile or base) be obtained by the equipment owner. The licensee is responsible for ensuring transmitter power, frequency, and deviation are within the limits permitted by the station license.

Transmitter adjustments may be performed only by a licensed technician holding an FCC first, second or general class commercial radiotelephone operator's license. There is no license required to install or operate the radio.

3. PRE-INSTALLATION CHECKOUT

3-1. Introduction

Each radio is adjusted and tested before shipment. However, it is recommended that receiver and transmitter operation be checked for proper operation before installation.

3-2. Testing

The radio should be tested complete with all cabling and accessories as they will be connected in the final installation. Transmitter frequency, deviation, and power output should be checked, as should receiver sensitivity, squelch operation, and audio output. QT equipment operation should be verified.

4. PLANNING THE INSTALLATION

4-1. General

Inspect the vehicle and determine how and where the radio antenna and accessories will be mounted.

Plan cable runs for protection against pinching or crushing wiring, and radio installation to prevent overheating.

4-2. Antenna

When an outdoor antenna is to be installed, select an unobstructed position with good visibility.

The VSWR of the antenna should be no more than 2.

Select a coaxial cable with as small loss as possible, and its length should be as short as possible.

4-3. Radio

Install the radio on a rack using rack-mount brackets, or on a flat surface that can withstand its weight. Do not install the radio in a place subject to direct sunlight or near heating equipment. Avoid wet place, and install it in a well-ventilated place.

4-4. AC power supply

This unit has been designed for use exclusively with commercial AC power supply. As the rated current for transmission output attains about 2A, connect the unit to a wall outlet that can handle this current with margin.

SERVICE

This radio is designed for easy servicing. Refer to the schematic diagrams, printed circuit board views, and alignment procedures contained in this manual.

SYSTEM SET-UP

Preparation : Prepare an EEPROM writer, KPT-20 or KPT-50.

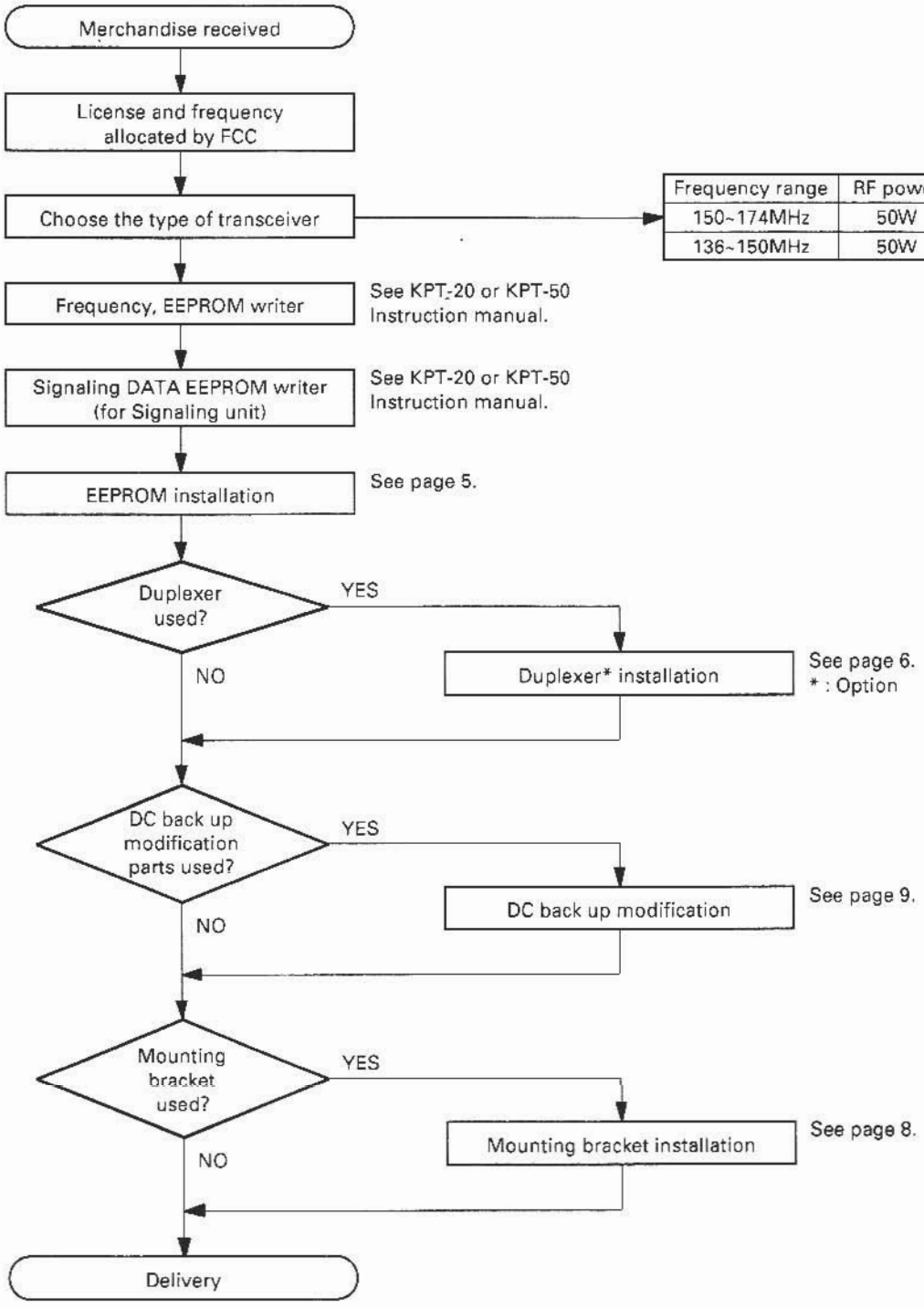

Frequency range	RF power	Type	
150~174MHz	50W	TKR-720	K,M,NM,AM
136~150MHz	50W	TKR-720	K2,M2,NM2,AM2

INSTALLATION

Installing the EEPROM of Signaling Unit

Note : EEPROM is inserted into the Signaling unit of the TKR-720. Install it after writing the data using the ROM writer (KPT-20 or KPT-50).

1. Remove the 10 screws (❶) holding the upper case to remove the upper case.

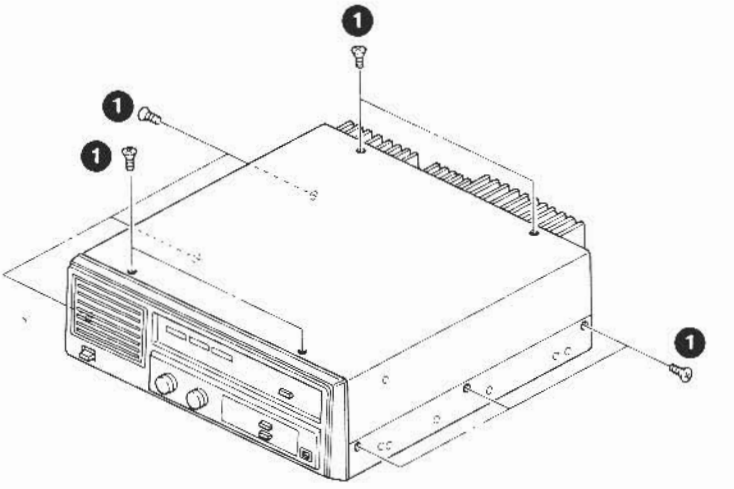

2. Remove the 11 screws (❷) retaining the shield cover to remove the shield cover.
3. Insert the EEPROM (❸) on which the data has been written into the IC socket (IC10) on the Signaling unit.

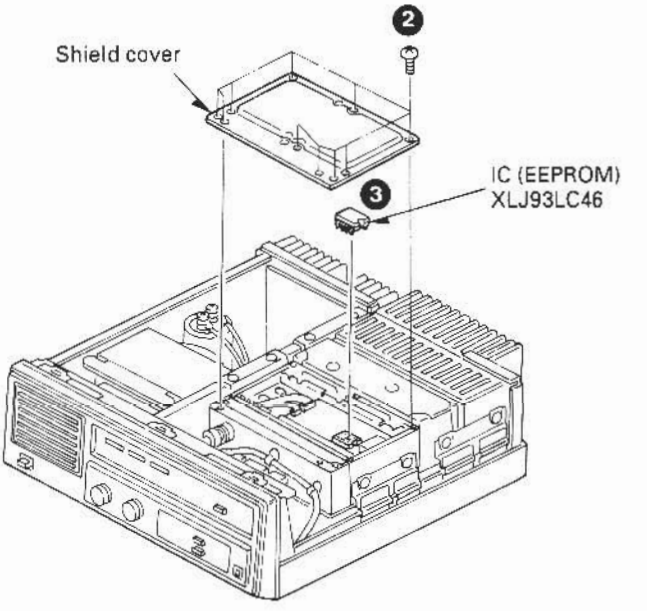

INSTALLATION

Installing the Duplexer

Note : When installing the duplexer in the TKR-720, use the either of the following products ;

1. CELWAVE (USA), 144 to 174MHz (PD636-6A)
2. Installation kit (KCT-11) : option
   - Installing fitting : J21-4339-03 ..... 1pc
   - M-M conversion receptacle : E04-0183-05 .... 1pc
   - Lead with connector : E37-0120-08 ..... 3pc
   - Truss screw (M4 x 2) : N09-0704-05 ..... 6pc
   - Tapping screw (M3 x 8) : N87-3008-46.... 2pc

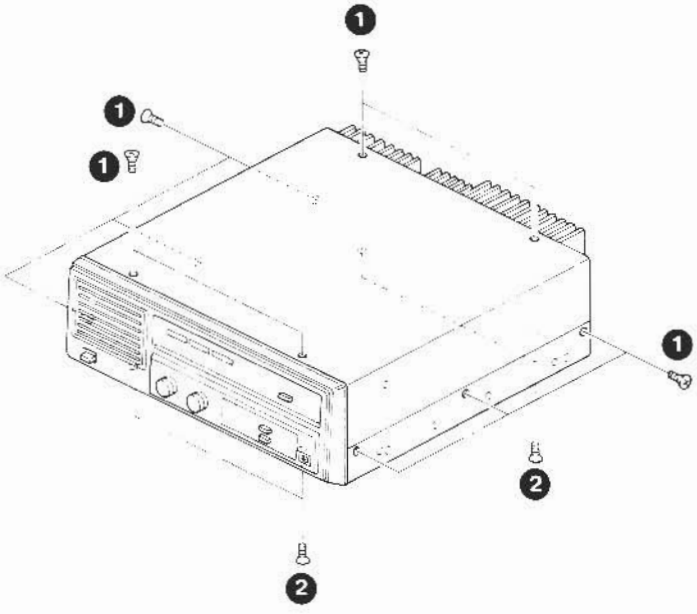

1. Remove the 10 screws (❶) holding the upper case to remove the upper case.
2. Remove the 4 screws (❷) holding the lower case to remove the lower case.
3. After removing the upper and lower cases, turn the set upside down, as shown in the figure (❸).
4. Remove the coaxial cables (❹) connected to the RX antenna connector.
5. Remove the bushing (❺) in the hole in the rear panel, insert the M-type receptacle (❻) into the hole (longer side facing in), and secure it with two tap-tight screws (❼).
6. Release the coaxial cable (❹) from the wire bands (❽ and ❾) and secure it with the wire bands (❿ and ⓫) on the opposite side.

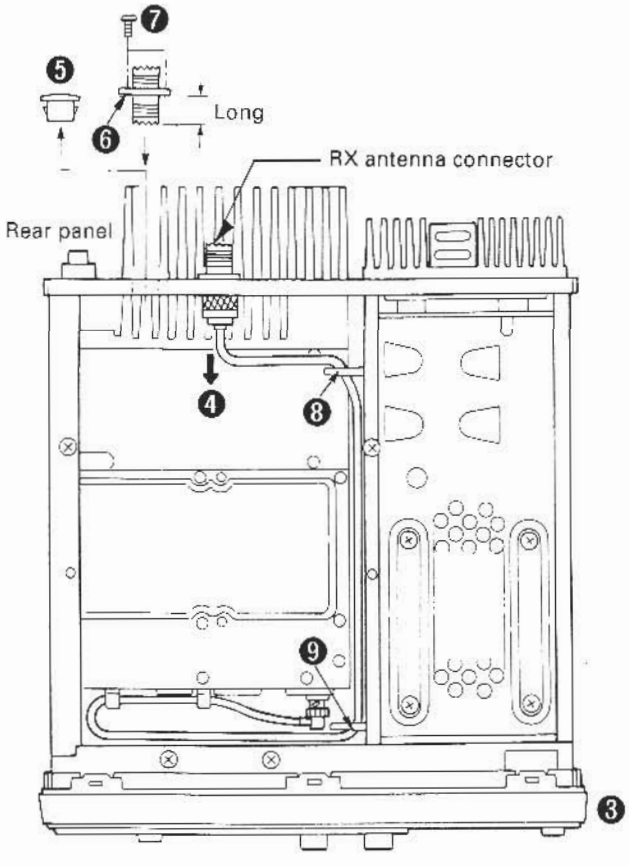

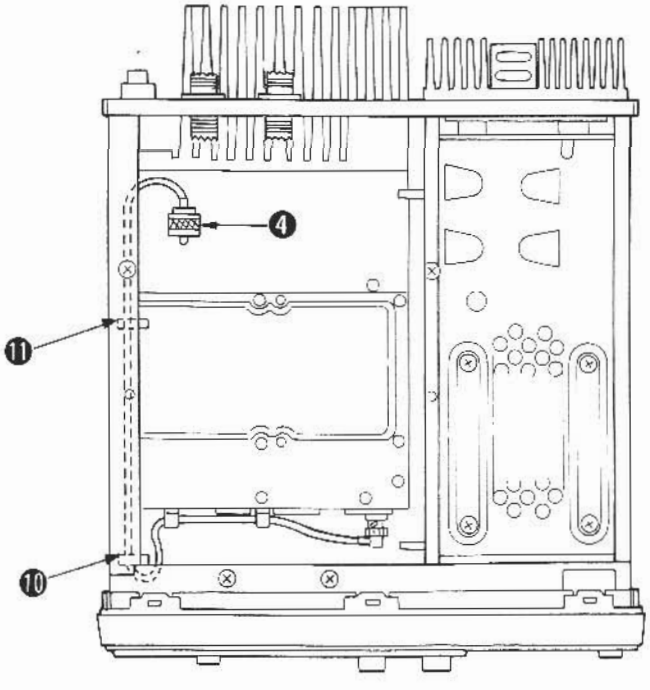

INSTALLATION

7. Secure the installation fitting (⓬) supplied with the KCT-11 to the duplexer (⓭) with two screws (⓮), and put it in position in the TKR-720 without securing it.
8. Connect the coaxial cable (❹) to the RX connector of the duplexer. Connect the coaxial cables supplied with the KCT-11 to the TX ANT (⓯) and duplexer TX connector (⓰) via the M-type receptacle (⓱). Connect another cable to the duplexer ANT connector (⓲) and TKR-720 duplexer antenna connector (⓳).
9. After connecting the coaxial cables, secure the duplexer (⓭) to the TKR-720 with four screws (⓴).

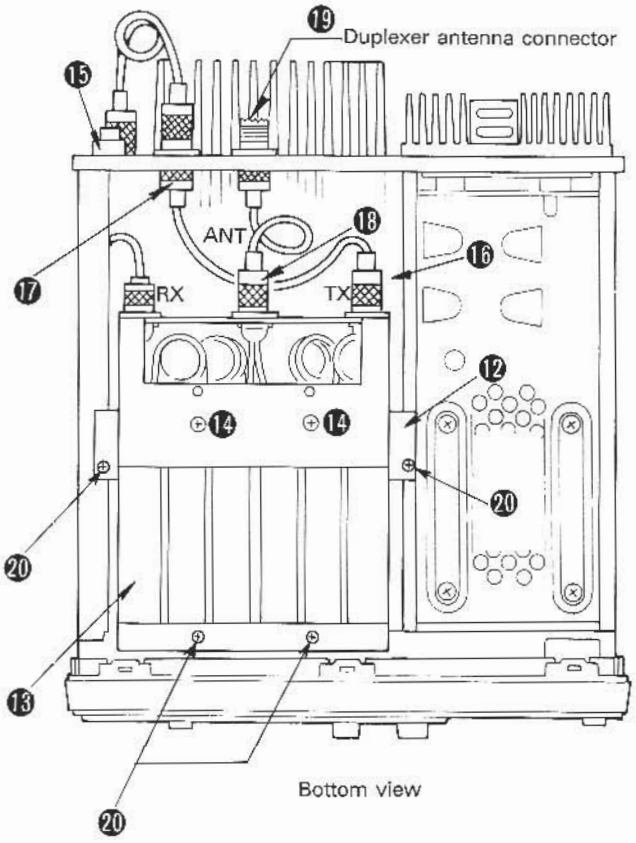

Note : The input/output connectors of the duplexer manufacture by CELWAVE are located as shown in the figure. Pay attention when connecting the connectors.

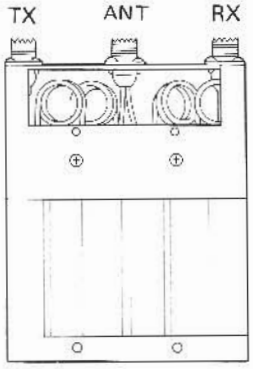

CELWAVE'S Duplexer

Note : When making adjustments after installing the duplexer, remove the front panel and hold down the sub-panel (㉑), then perform adjustments from the adjusting holes (㉒).

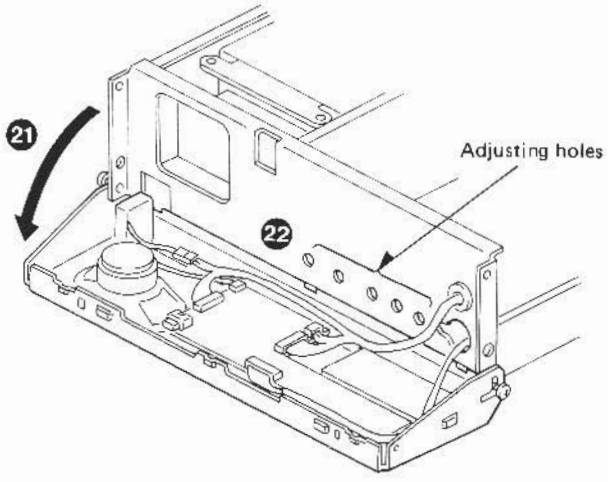

INSTALLATION / CONVERSION

Attaching the Rack-mount Brackets (for EIA racks)

The brackets and screws are optional.
Brackets : J21-4250-04 (Common for left and right)
Screw : N09-0704-05 (Use 2 screws per bracket)

1. Attach the 2 brackets (❶) using 4 screws (❷).

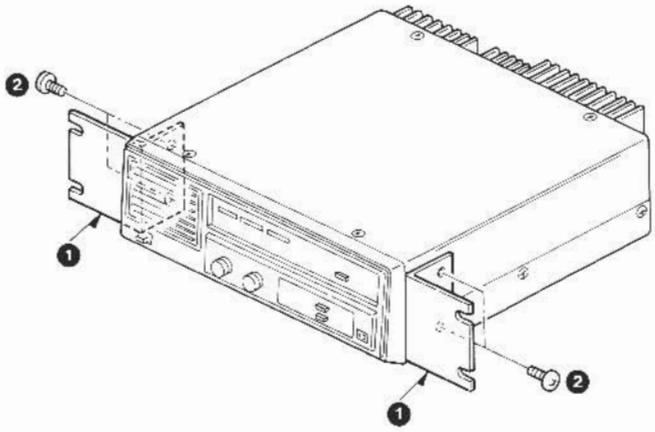

2. When the TKR-720 is to be mounted vertically : Attach 4 brackets (❸), using 8 screws (❹), to be side of the bottom panel.

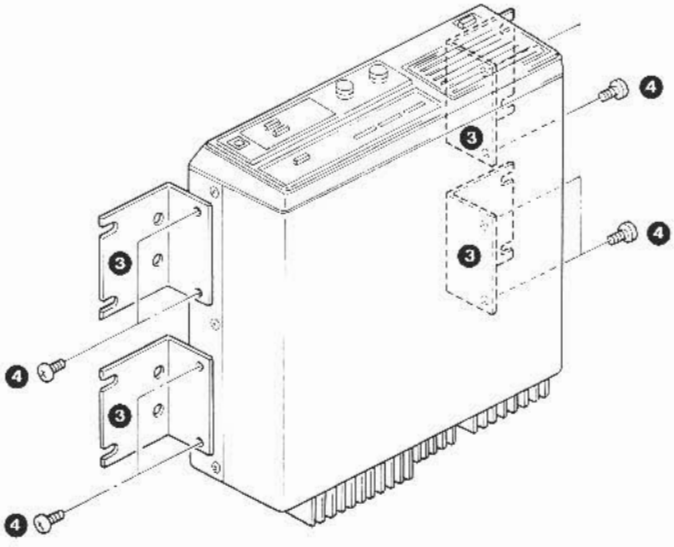

CONVERSION

Signaling Wait Mode Setting Method

- **What is the signaling wait mode?**

The KPT-20 or KPT-50 can write signaling codes into channels 1 to 16. The codes written in up to eight channels can be used at a time, and the codes written in channels 1 to 8 are effective. One or more signaling codes to be waited for in the repeater mode can be selected. They can be changed by W4 of the Signaling unit (X52-3140-10).

- **Wait mode setting method**

Ref. No.	Function	Mode	Setting
W4	Decode change in repeater mode	Short	Two or more codes
		Open	One code

Factory setting : Short
W4 part No. : E31-1448-05

If the signaling wait is one code (W4 : open), the TKR-720/N uses the code written in channel 1, and the TKR-720A uses the signaling code in the displayed channel. If several codes are waited for (W4 : short), the multiple signaling codes written in channels 1 to 8 can be waited for.

Note : This function is available in serial No. 504XXXXX or later, and IC8 (27C256QJESB) or later.

SIGNALING UNIT (X52-3140-10)

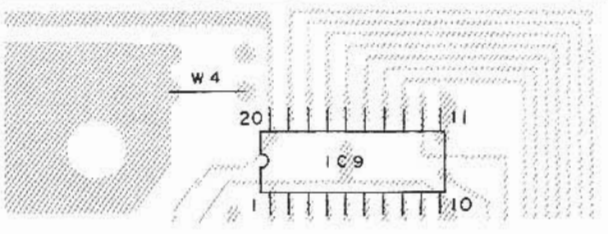

CONVERSION

Modification of the DC Switching Circuit (For Backup during a Power Failure) : Excluding TKR-720A (M, M2)

The following parts (optional) are required for the circuit modification.

Diode (S25VB10)	1 pc.
DC cable (E30-2076-15)	1 pc.
Connector with lead wires (E31-3389-15)	1 pc.
Connector with lead wires (E31-3455-15)	1 pc.
Screw (N87-4014-46)	1 pc.

1. From the cover (❶) attached to the rear panel, remove the 2 screws (❷) and take off the cover.

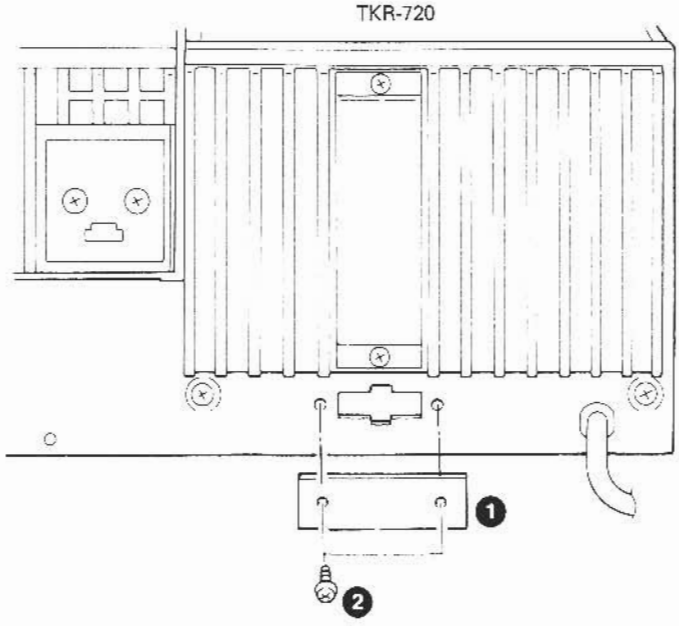

2. Insert the connector with lead wires (❸) into the hole on the rear panel (❹) (so that the red lead is on the right).
3. Place the diode (❺) so that its notch faces the direction shown in the illustration, and attach it using a screw (❻).
4. Disconnect the connector (❼) from the OUT terminal of the AVR unit, and connect its lead wire to pin 1 of the diode (❺).

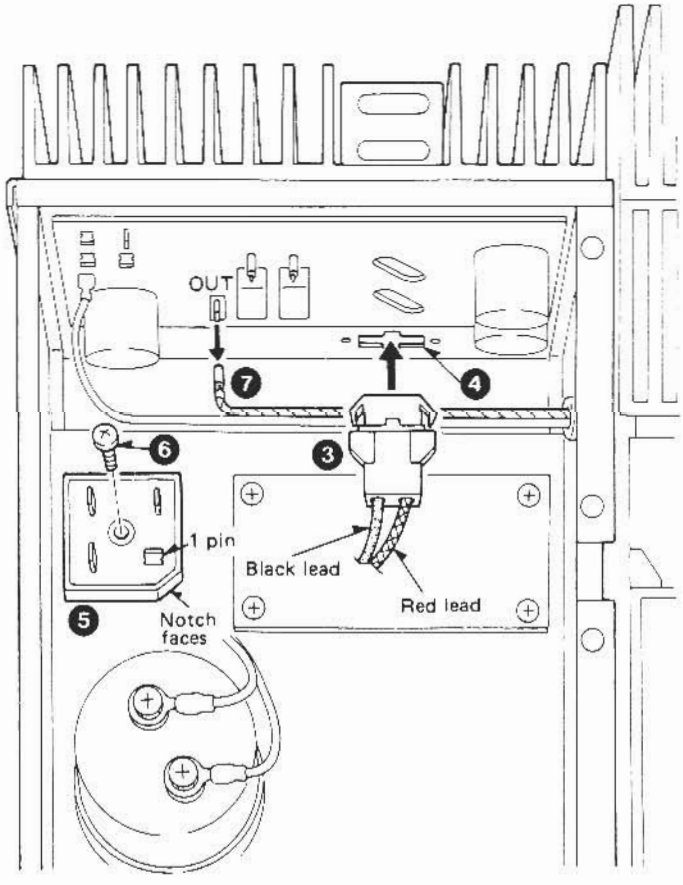

CONVERSION

5. Connect the optional connector with lead wires (❽) to the OUT terminal of the AVR unit and to pin 3 of the diode.
6. Connect the red lead (❾) of the optional connector with lead wires to pin 2 of the diode, and its black lead (❿) to the negative (–) terminal of chemical capacitor C101. Do not disconnect the lead wire which has been connected to the C101 negative terminal, but connect the black lead to it.

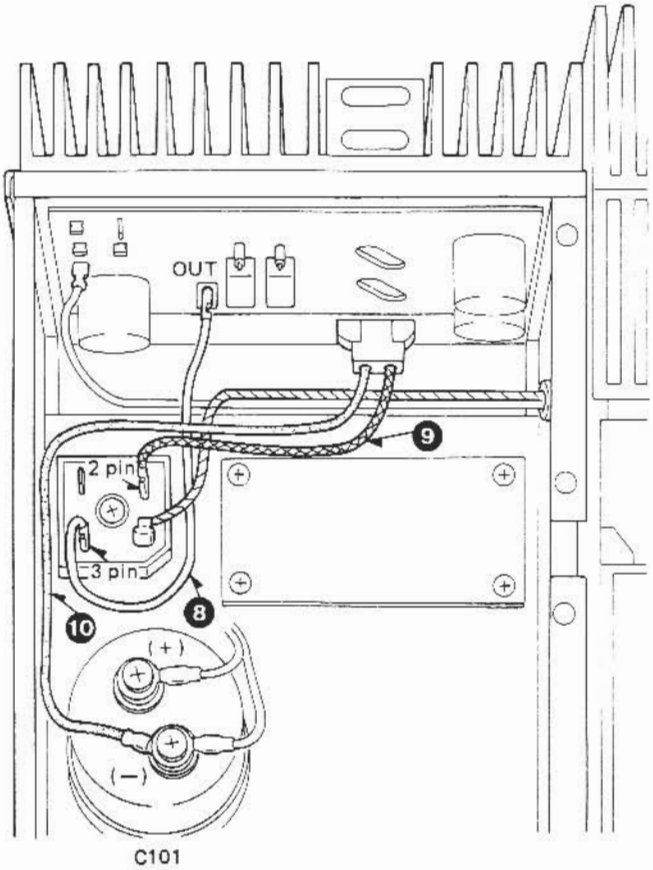

7. Connect the optional DC cable to the connector on the rear panel (⓫).

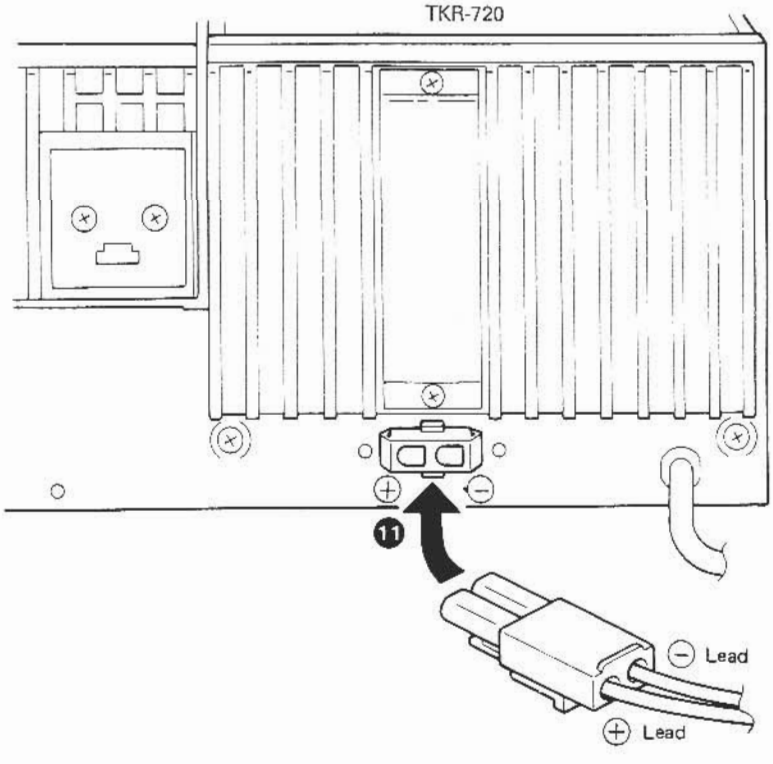

DISASSEMBLY FOR REPAIR

How to Remove the Case

1. Remove the 10 screws (❶) holding the upper case to remove the upper case.
2. Remove the 4 screws (❷) holding the lower case to remove the lower case.

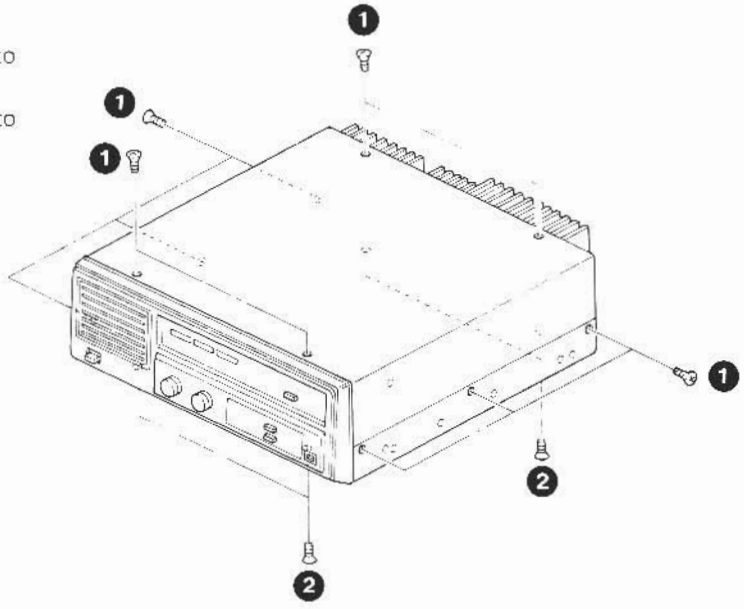

Disassembling the Transmitter/Receiver Section

1. How to remove the transmitter/receiver section

1. Remove the 4 connectors (CN1 to CN4) connected to the panel (Display unit) (❶).
2. Remove the 3 screws (❷) holding the transmitter/receiver section.
3. While lifting up on the transmitter/receiver section (❸), remove the power supply connector (❹) and the connector cable (❺) connected to the frame, remove the screw (❼) securing the transmitter/receiver section, and put the transmitter/receiver section back in place.
4. Remove the 4 screws (❽) holding the transmitter/receiver section to the frame to remove the transmitter/receiver section.

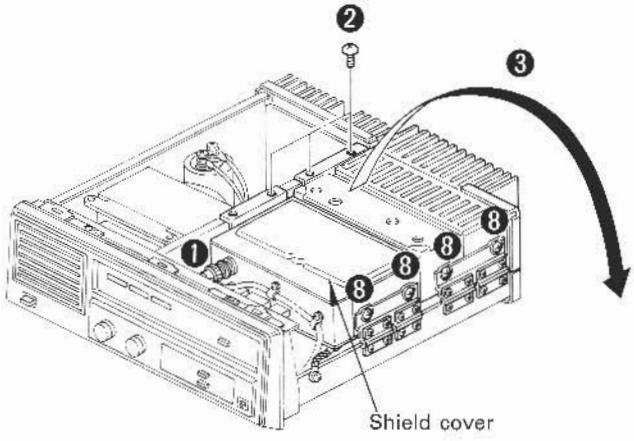

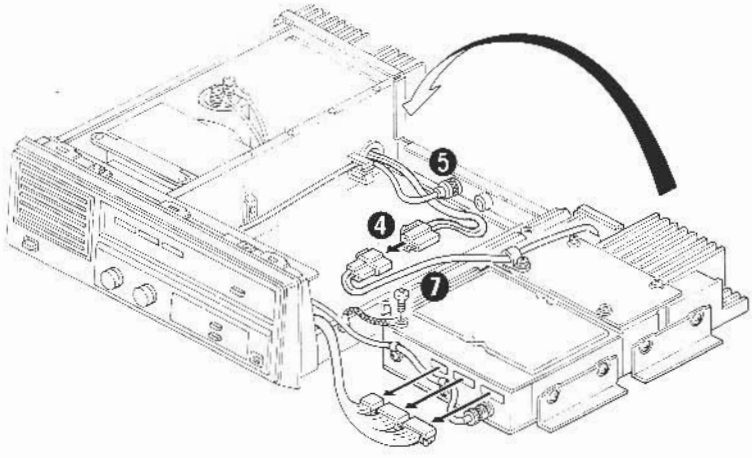

DISASSEMBLY FOR REPAIR

2. How to remove the TX-RX unit

1. Remove the 6 screws (❶) retaining the shield cover to removes the shield cover.
2. Remove the 2 connectors (❷) of the Signaling unit and the 6 screws (❸) retaining the shield cover to remove the shield cover.
3. Remove the 6 screws (❹) retaining the connectors CN2 to CN4.
4. Remove the 11 screws (❺) attached on the bottom of the TX-RX unit to remove the shield cover.
5. Remove the 3 connectors CN1 (❻), CN8 (❼) and CN10 (❽) connected to the TX-RX unit.
6. Remove the 4 screws (❾) connected between the TX-RX unit and Final unit.
7. Remove the leaf spring fixing the two IC's to the frame with a screwdriver, etc. (❿).
8. Remove the 11 screws (⓫) mounting the TX-RX unit to remove the TX-RX unit.

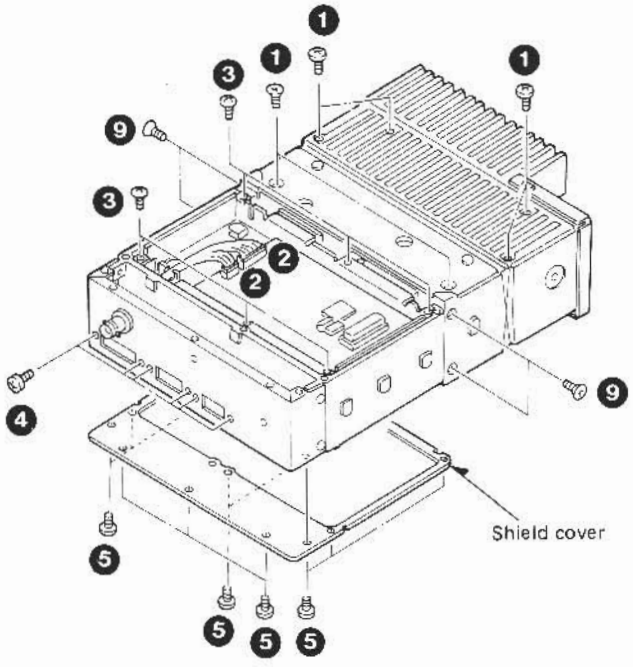

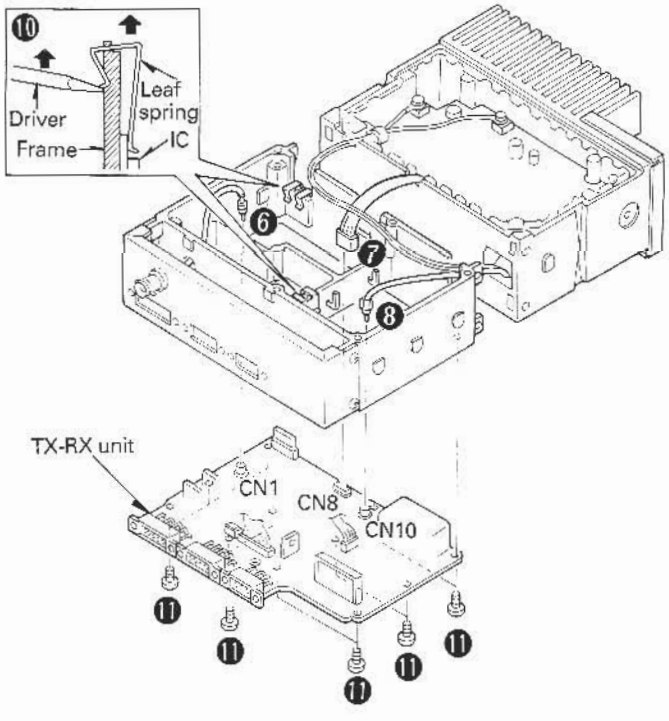

DISASSEMBLY FOR REPAIR

3. Disassembling the Final unit ass'y

- **Final unit (X45-3320-XX) side**

1. Remove the soldered part (❶) of the VHF connector and that (❷) of the lead wire (coaxial cable installed through) from the final unit.
2. Remove the two screws (❸) fixing the lead wires of the power connector.
3. Remove the screw (❹) securing the cable holder.
4. Remove the two screws (❺) fixing the transistor from the heat sink.
5. Remove the 14 screws (❻) fixing the final unit from the heat sink to remove the final unit.
6. Remove the two screws (❼) fixing the VHF connector to remove the connector from the heat sink.

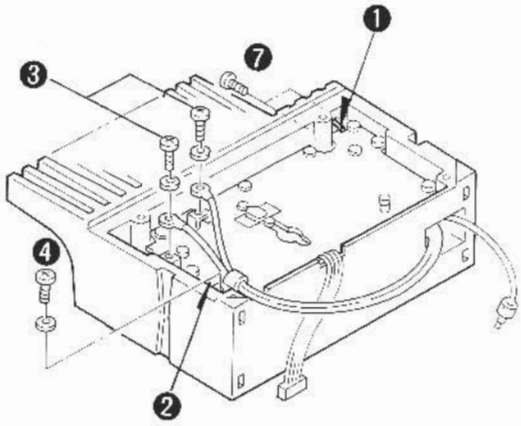

Final unit

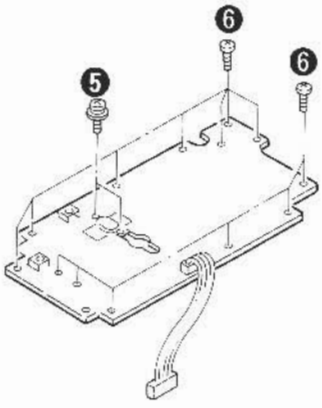

4. Drive unit (X45-3310-XX) side

1. Remove the 4 screws (❶) retaining the shield cover to remove the shield cover.
2. Remove the soldered part (❷) of the lead wire (coaxial cable installed through) from the drive unit.
3. Remove the two screws (❸) fixing the module unit from the heat sink.
4. Remove the screw (❹) fixing the transistor from the heat sink.
5. Remove the 8 screws (❺) fixing the drive unit from the heat sink to remove the drive unit.

Note : When replacing only the module, remove the screws (❸) and then remove the four soldered parts of the module terminals (❻) to remove the module.

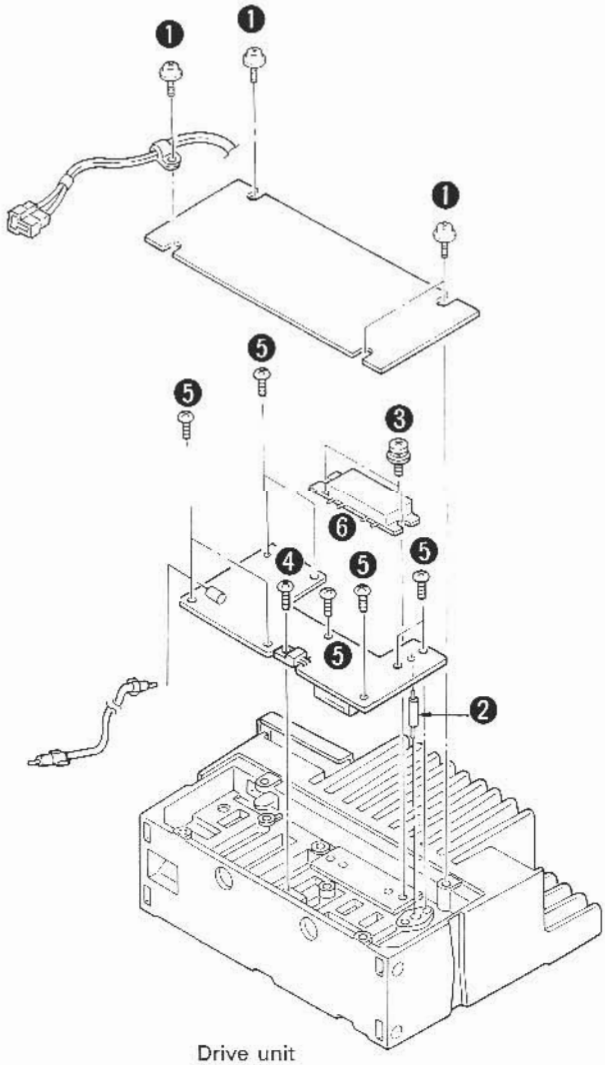

Drive unit

DISASSEMBLY FOR REPAIR

How to Remove the Panel

1. Pull off the VOLUME, SQUELCH and CHANNEL knobs (❶). CHANNEL knob is TKR-720A only.
2. Release the 6 hooks (❷) located on the upper and lower section, and holding the sub-panel by pushing them up with your finger. Then remove the sub-panel (❸) by pulling it out toward the front.

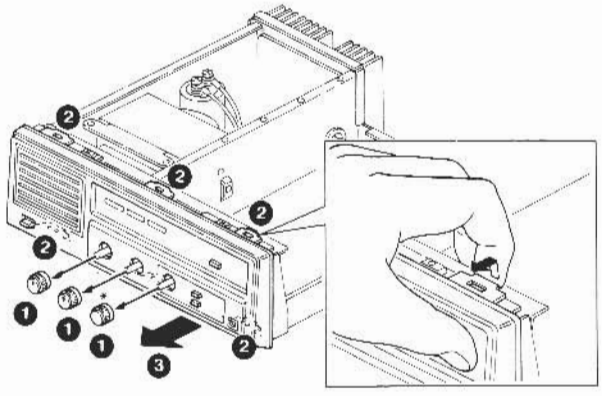

* : TKR-720A only

Disassembling the Sub-panel

1. TKR-720/N
   Remove the 2 nuts and 2 washers holding the VOLUME and SQUELCH VRs (❶).
   TKR-720A
   Remove the 3 nuts and 3 washers holding the VOLUME, SQUELCH and CHANNEL VRs (❶).
   Then remove the 2 screws (❷) holding the POWER switch.
2. Remove 2 of the screws (❸) holding the sub-panel, and loosen the other 2 screws (❹), then tilt the sub-panel toward the front (❺).
3. Remove the 5 connectors (❻) connected to the Display unit, and remove the connector (❼) connected to the POWER switch.
4. Remove the 2 remaining screws (❽) holding the sub-panel to remove the sub-panel.

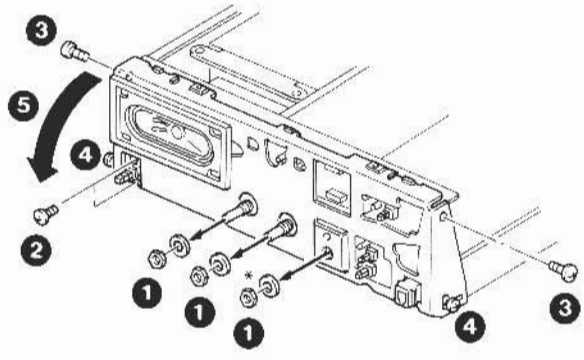

* : TKR-720A only

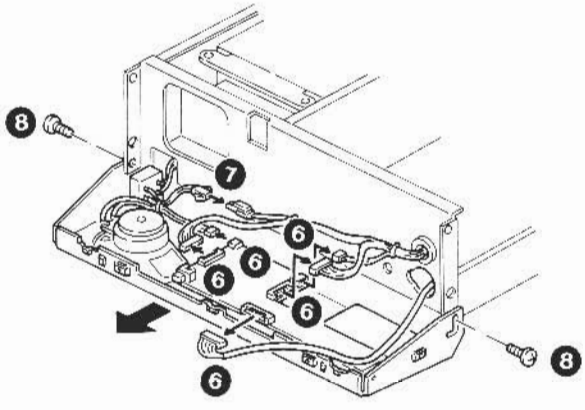

5. Remove the 9 screws (❾) holding Display unit (A/4) and (B/4) to the sub-panel, and remove the Display unit (A/4) and (B/4).
6. Remove the 4 screws (❿) holding the speaker to the sub-panel to remove the speaker.

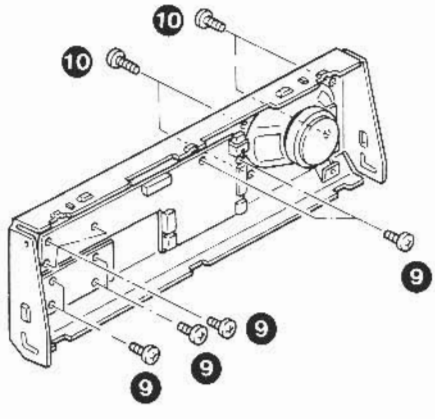

DISASSEMBLY FOR REPAIR

Disassembling the AVR Unit

1. How to remove the AVR unit (X43-3040-10) (A/2)

1. Remove the 8 connectors (❶) connected to the AVR unit.
2. Remove the 4 screws (❷) holding the AVR unit to the rear panel, and remove the AVR unit from the rear panel.

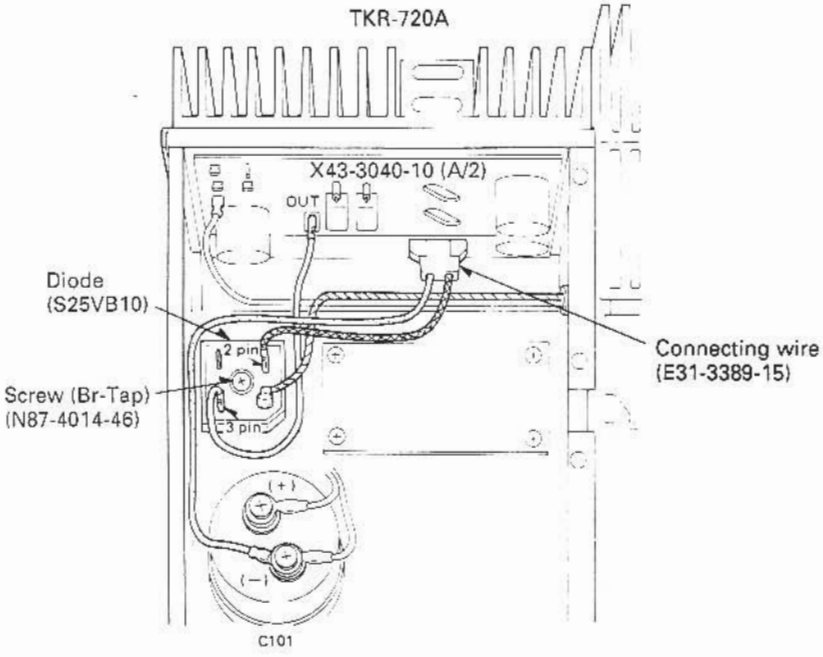

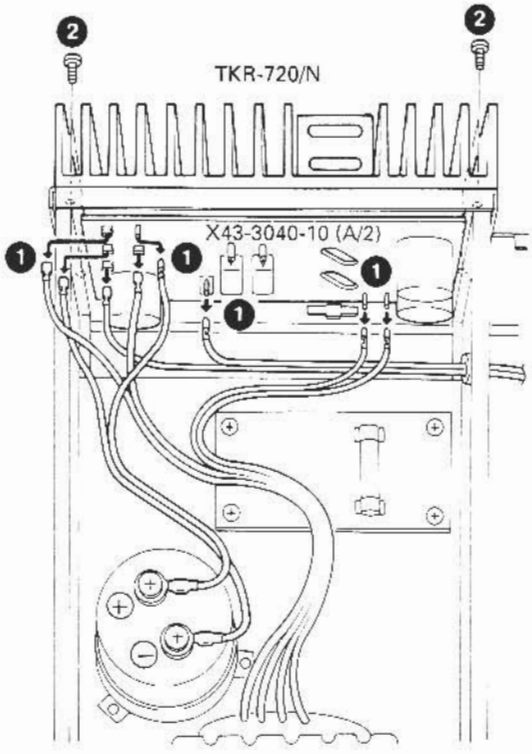

2. Disassembling the AVR unit (X43-3040-10) (A/2)

1. Remove the 4 screws (❸) holding the AVR unit.
2. Desolder the 4 wires (❹) connected to the bases and emitters of transistors Q5 and Q6.
3. Remove the 2 screws (❺) on the radiation cover attached to the heat sink to remove the radiation cover.
4. Remove the 4 screws (❻) of the transistors (Q5 and Q6) attached to the heat sink, and remove the AVR unit (A/2).

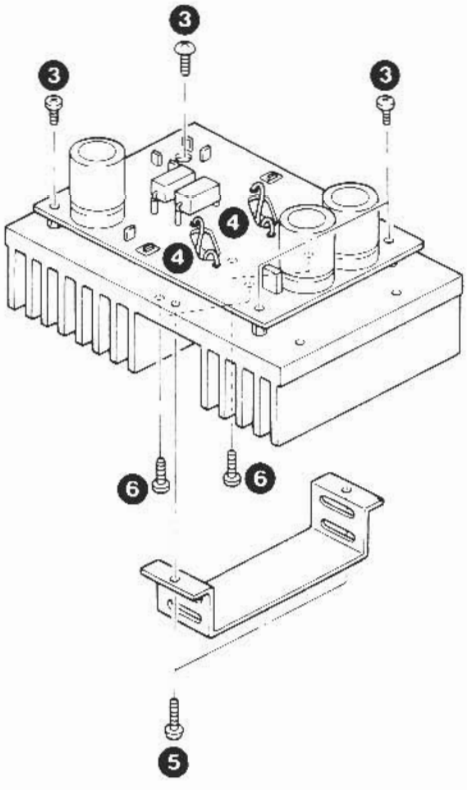

DISASSEMBLY FOR REPAIR

3. How to remove the AVR unit (X43-3040-10) (B/2) and the electrolytic capacitor (C101)

1. Remove the 4 wires (❼) connected to the AVR unit.
2. Remove the 4 screws (❽) holding the AVR unit to remove the AVR unit.
3. Remove the 3 screws (❾) holding the electrolytic capacitor (C101).

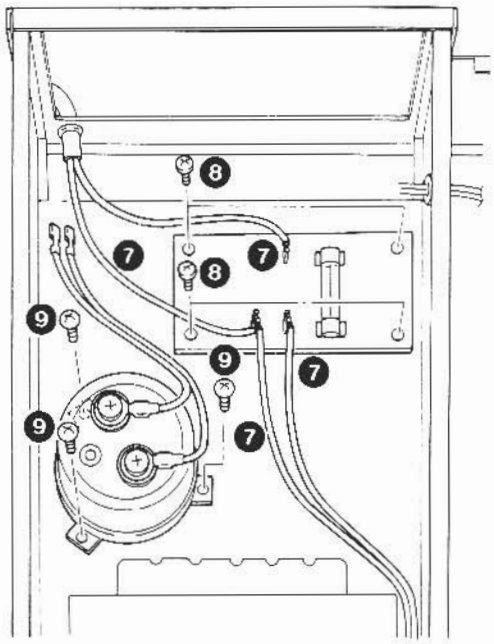

4. How to remove the power transformer

1. Remove the 4 screws (❿) holding the power transformer to the bottom plate, and remove the power transformer.

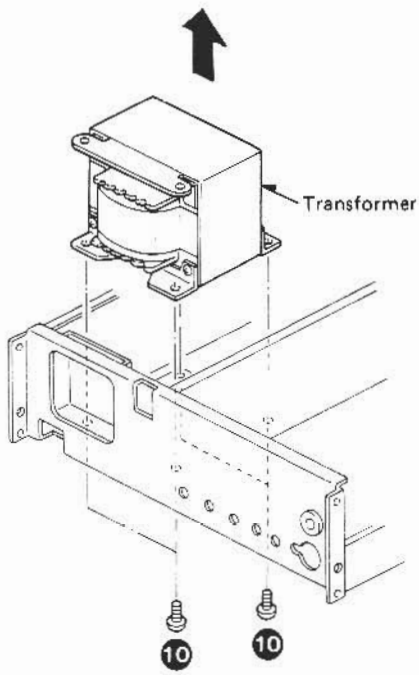

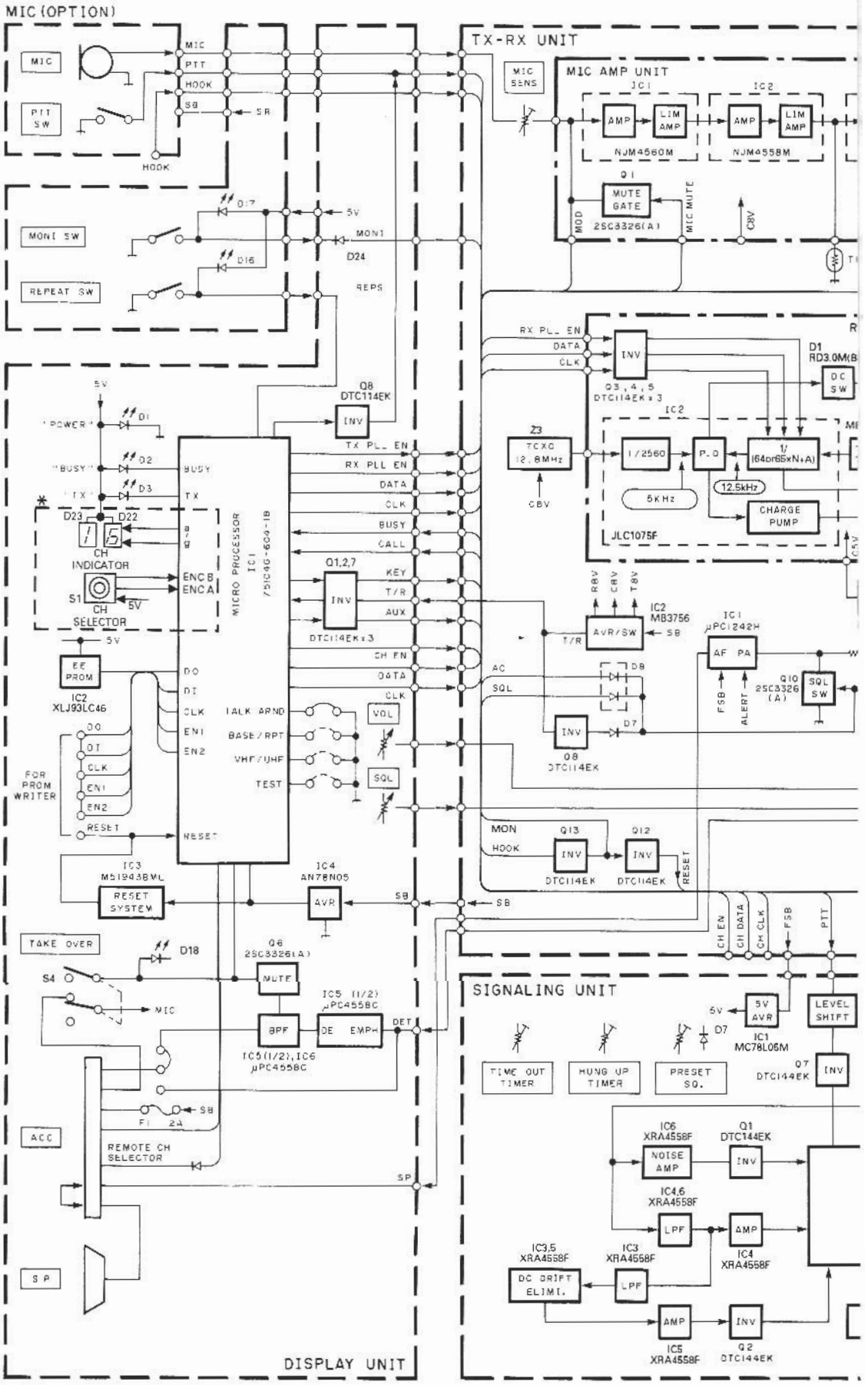
MIC (OPTION)
MIC
PTT SW
HOOK
MONI SW
REPEAT SW
TX-RX UNIT
MIC SENS
MIC AMP UNIT
IC1
IC2
AMP
LIM AMP
NJM4560M
NJM4558M
Q1
MUTE GATE
2SC3326(A)
MOD
MIC MUTE
CBV
RX PLL EN
DATA
CLK
INV
Q3,4,5
DTC114EK x 3
D1
RD3.0M(B
DC SW
Z3
TCXO
(2.8MHz)
1/2560
P.D
1/(64or65xN+A)
12.5kHz
5KHz
CHARGE PUMP
JLC1075F
Q8
DTC114EK
TX PLL EN
RX PLL EN
BUSY
CALL
KEY
T/R
AUX
CH EN
DATA
CLK
Q1,2,7
DTC114EK x 3
MICRO PROCESSOR
IC1
7516G-604-1B
ENC B
ENC A
CH INDICATOR
CH SELECTOR
S1
EE PROM
IC2
XLJ93LC46
DO
DI
CLK
EN1
EN2
FOR PROM WRITER
RESET
TALK AROUND
BASE/RPT
VHF/UHF
TEST
VOL
SQL
IC2
MB3756
AVR/SW
IC1
μPC1242H
AF PA
Q10
2SC3326 (A)
SQL SW
FSB
ALERT
AC
SQL
D8
D7
MON
HOOK
Q13
Q12
DTC114EK
IC3
MB1943BML
RESET SYSTEM
IC4
AN78N05
AVR
SB
TAKE OVER
D18
S4
MIC
Q6
2SC3326(A)
MUTE
IC5 (1/2)
μPC4558C
BPF
DE EMPH
DET
IC5(1/2),IC6
μPC4558C
F1 2A
ACC
REMOTE CH SELECTOR
SP
DISPLAY UNIT
SIGNALING UNIT
5V AVR
IC1
MC78L05M
LEVEL SHIFT
Q7
DTC144EK
TIME OUT TIMER
HUNG UP TIMER
PRESET SQ.
IC6
XRA4558F
NOISE AMP
Q1
DTC144EK
IC4,6
XRA4558F
LPF
AMP
IC4
XRA4558F
IC3,5
XRA4558F
IC3
XRA4558F
DC DRIFT ELIMI.
IC5
XRA4558F
Q2
DTC144EK

TKR-720/N/A

BLOCK DIAGRAM

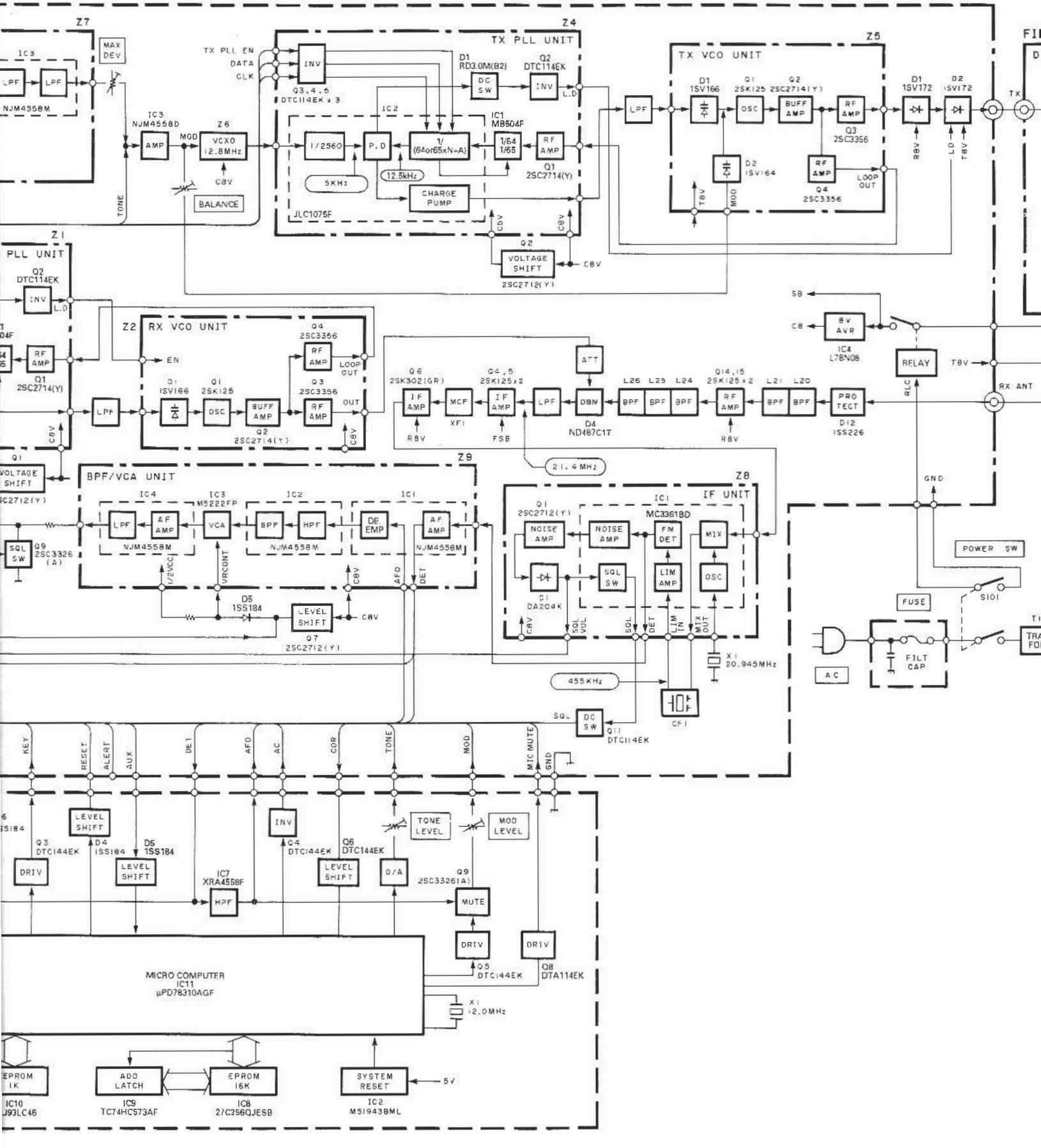

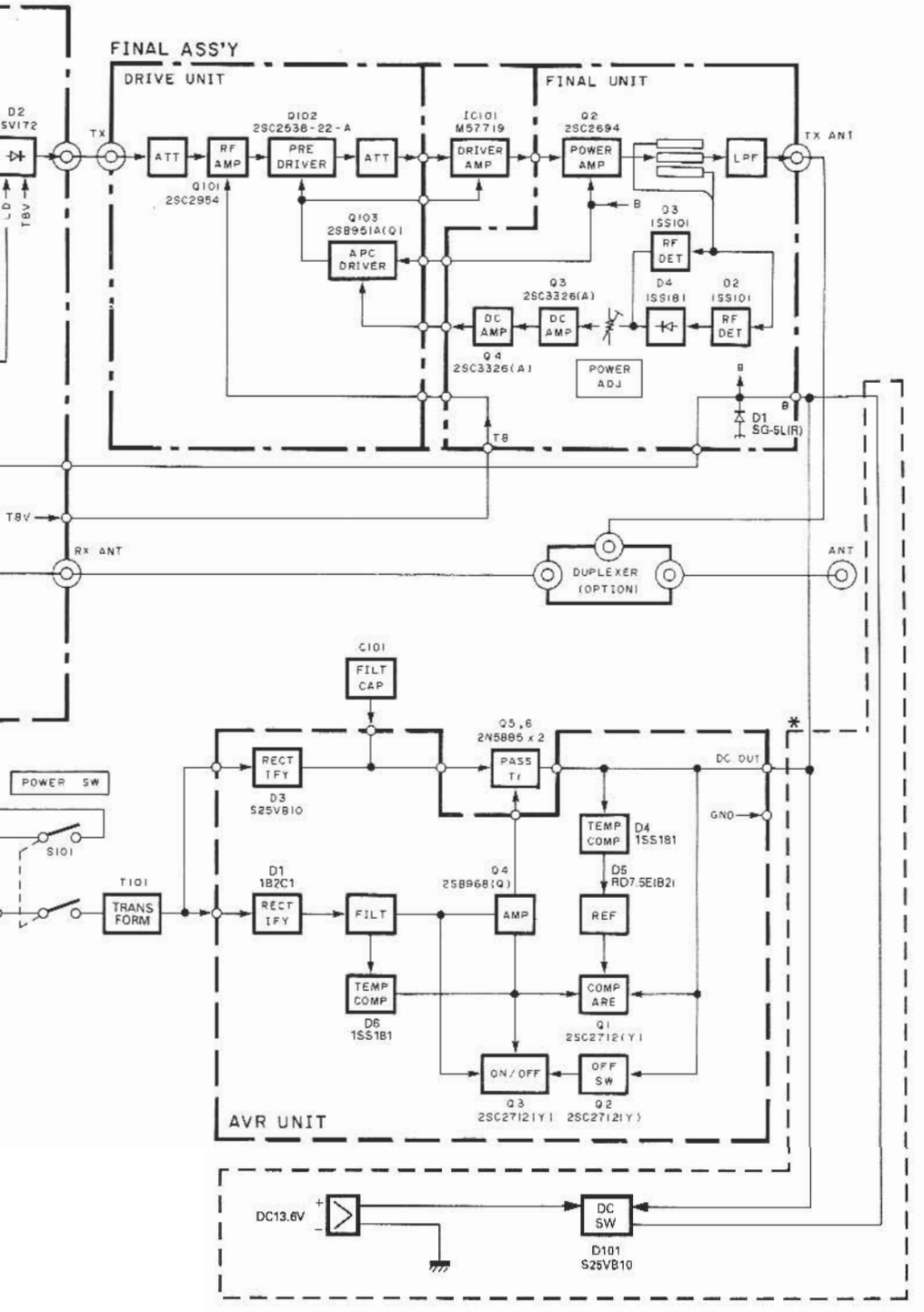

* TKR-720A only

CIRCUIT DESCRIPTION

Transmitter Circuit

The signal generated at the Transmitter Voltage Controlled Oscillator (TX VCO, Z5), which operates at the transmit frequency, is fed to a voltage amplifier Q101 (2SC2954) after going through a 3dB attenuator. The signal is further amplified by Q102 (2SC2538-22-A) and again fed through a 3dB attenuator before being applied to the driver module (IC101, M57719 or M57719L-24).

At IC101, the signal is power amplified and the output of IC101 is applied to the final power amplifier (Q2, 2SC2694). After power amplification at Q2, the signal is routed to the antenna connector after going through the antenna switching circuit and a 7-pole lowpass filter.

Q101 is biased for class B operation, which renders a low threshold, insuring a smooth operation from a very small signal level.

Q102 input circuit impedance is closely matched to the Q101 output impedance with low Q design in mind to obtain stable, board band operation. Incorporation of a low Q micro-strip line design permits transmitter operation without returning within its entire operating range.

Transmitter forward power is monitored at the Automatic Power Control (APC) detector (D3, 1SS101), located between the antenna switch and the lowpass filter, and this detector output is used for a comparison against the reference voltage at a differential amplifier (Q3 and Q4, 2SC3326A) after the level is set at VR1. The differential amplifier output drives the APC DC amplifier (Q103, 2SB951AQ), which in turn controls supply voltages to Q102 and IC101, to maintain constant output power.

To protect the transmitter power amplifier stages, there is a reflected power protection circuit.

The reflected power protection reduces the transmitter output power by controlling the differential amplifier, if a high VSWR condition is detected at the reflected power detector (D2, 1SS101).

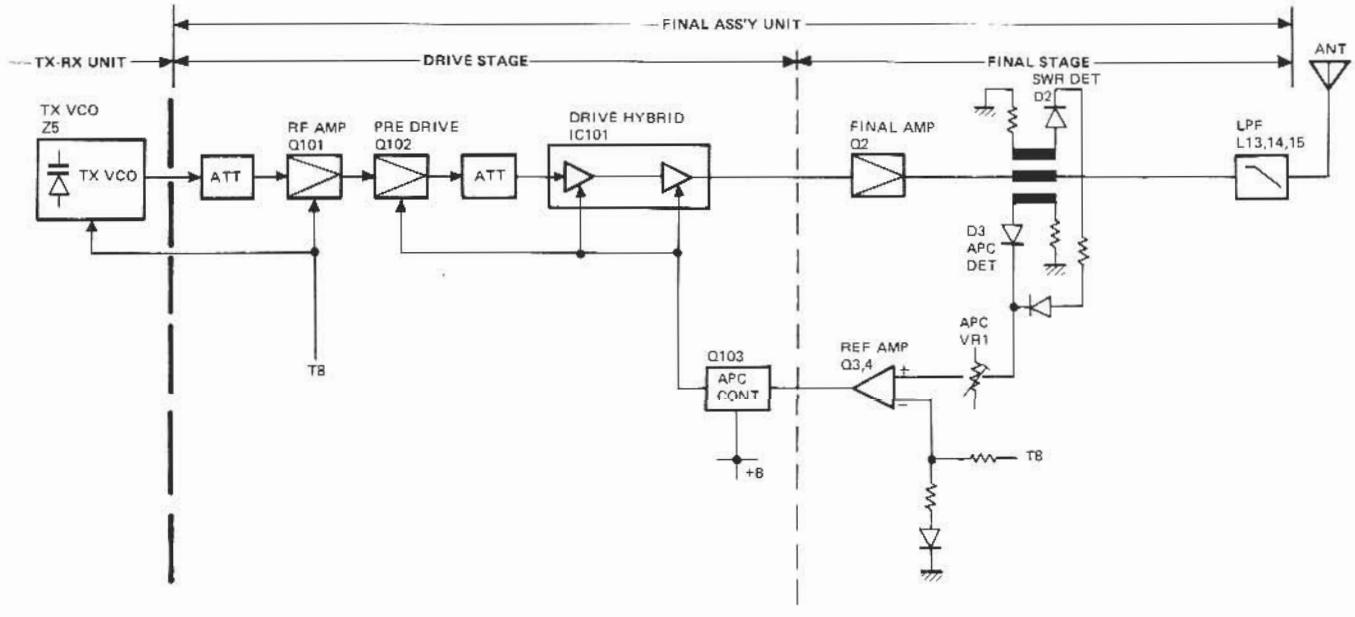

Fig. 1 Transmitter block diagram

CIRCUIT DESCRIPTION

Receiver Circuit

The surge voltage form the antenna is removed or absorbed by L27 and D12 (1SS226), and the receive signal is passed through the bandpass filter (L20, L21).

The signal is then amplified by an RF amplifier (Q14, 2SK125 and Q15, 2SK125 connected in parallel) and filtered again by bandpass filters (L24, L25 and L26). After amplification and filtering, the signal is applied to a double balanced modulator (DBM, D4, ND487C1T) for mixing with the first local signal generated at the common frequency synthesizer.

The heterodyning action of the first mixer produces a 21.4MHz first intermediate frequency (1st IF), which is applied to a 6-pole monolithic crystal filter (MCF, XF1) after being amplified by a buffer amplifier (Q4, 2SK125 and Q5, 2SK125 connected in parallel). The signal out of the MCF is further amplified by a 1st IF amplifier (Q6, 2SK302GR) and sent to the IF unit (Z8).

The signal applied to Z8 is mixed with a 20.945MHz signal at IC1 in Z8, which produces a 455kHz 2nd IF signal. The signal obtained at the 2nd mixer is filtered by a 455kHz ceramic filter (CF1) and amplified by limiting amplifier stages in IC1. The recovered audio signal from the incoming signal is also obtained at IC1 by a quadrature type FM detector. This recovered audio signal is then sent to the audio amplifier circuit and to the noise actuated squelch circuit.

In the receiver audio amplifier section, the recovered audio signal from Z8 is first applied to a bandpass filter/voltage controlled amplifier (BPF/VCA, Z9) unit. At this BPF/VCA unit, the signal is amplified and sent to pin 9 of CN6 as the DET signal. The signal is returned to Z9 by way of the Signaling unit. IC1 (NJM4558M) forms a lowpass filter and a highpass filter, and IC2 forms a bandpass filter and lowpass filter in Z9. The frequency components below 300Hz and above 3000Hz are attenuated in the above filter circuits.

The filtered audio signal is then applied to an electronic volume control (IC3, M5222FP), where the audio signal level is controlled by a DC voltage sent from the front panel volume control. The signal is then de-emphasized and sent to the audio power amplifier circuit (IC1, μPC1242H) after going through squelch switches (Q9 and Q10, 2SC3326A).

The alert signal is also applied to IC1, when a specific signaling board, which requires an audible alert through the speaker, is installed. The signal, which is amplified by IC1, drives either the internal speaker or the optional external speaker and this selection is done through the accessory connector located on the Final unit.

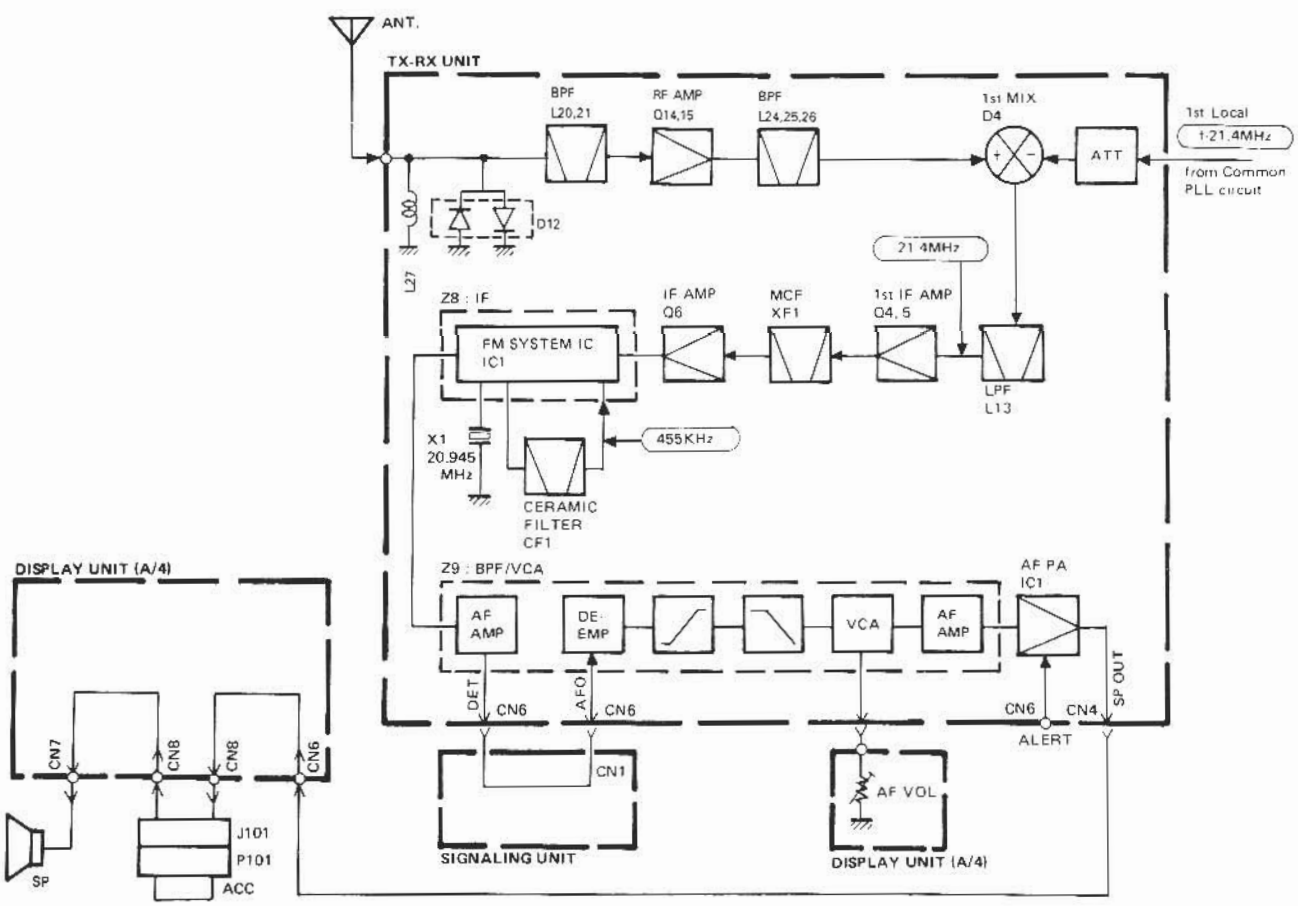

Fig. 2 Receiver block diagram

CIRCUIT DESCRIPTION

Squelch Circuit

The high frequency component of the recovered audio signal is fed to a noise amplifier within IC1 (MC3361BD) of Z8 and it is further amplified by an external noise amplifier (Q1, 2SC2712Y). The signal is then detected by a noise detector (D1, DA204K) and applied to the squelch switch in IC1. This detected noise is also routed to the squelch control (VR1) through the Display unit (C/4) for adjusting the noise squelch sensitivity.

The busy information is sent from the above IC1 (75104G-604-1B) in the Display unit in serial format to turn on or off the busy LED. The squelch switch output and the Audio Control (AC) signal from the signaling board are combined at D8 (1SS184) and applied to squelch switch transistors Q9 (2SC3326A) and Q10 (2SC 3326A) along with the inverted signal of transmit/receive control signal. The squelch switch controls the input signal to the audio amplifier to mute or unmute the receive audio.

While the busy LED is being controlled only by the noise squelch circuit, the actual audio signal is controlled by the following signals and in order to unmute the audio, each signal must be in the condition as specified.

SQL signal = Low
R8 line = High
T/R signal = High
AC signal = Low

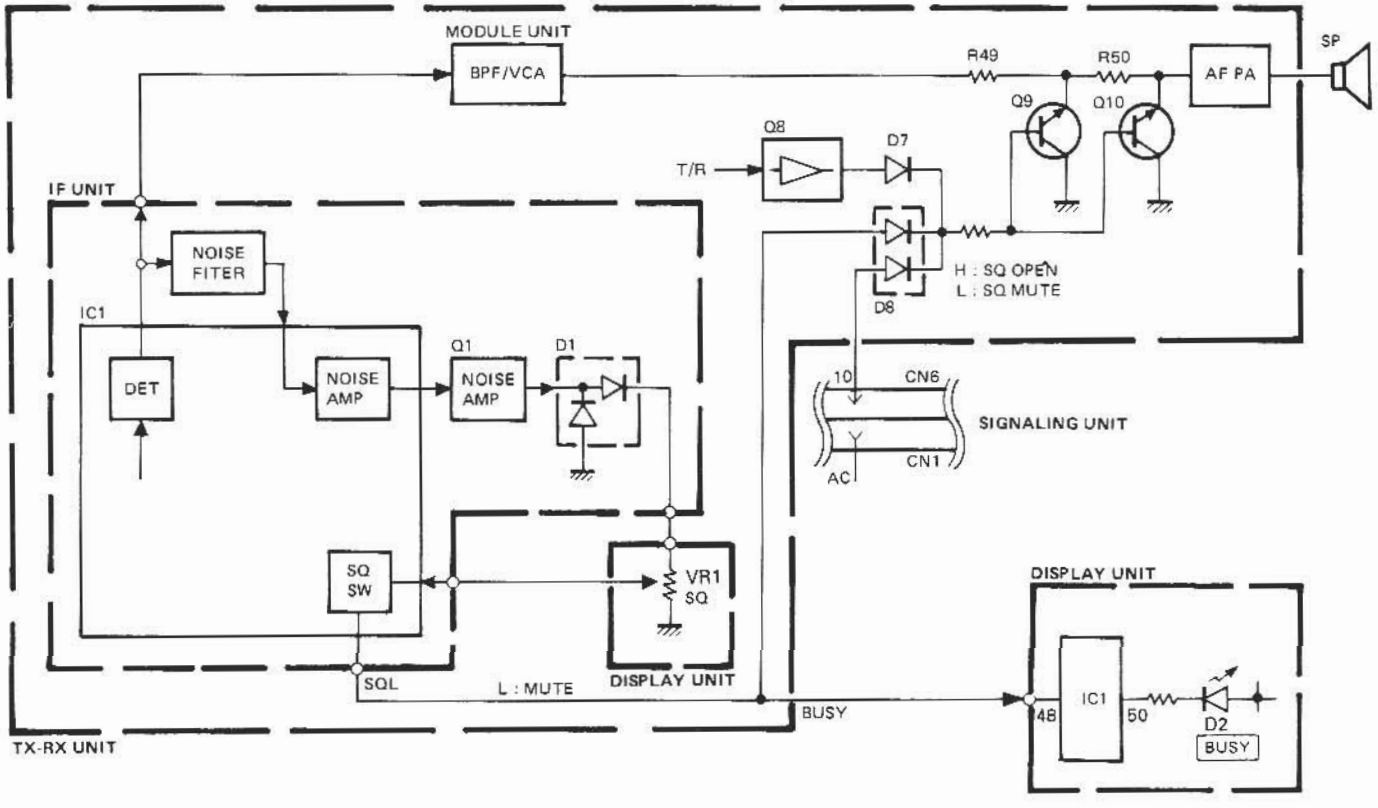

Fig. 3 Squelch circuit

CIRCUIT DESCRIPTION

RX Frequency Synthesizer

The RX frequency synthesizer consists of three major circuits. They are the temperature compensated crystal oscillator (TCXO, Z3), RX voltage controlled oscillator (RX VCO, Z2) and RX phase locked loop unit (RX PLL, Z1).

The TCXO is operating at 12.8MHz and its frequency stability is maintained within ±2.5ppm from –30°C to +60°C. This output signal is fed to the frequency synthesizer IC (IC2, JLC1075F) in Z1. At IC2, this signal is divided by 2560 to become a 5kHz reference signal.

The output from the RX VCO operates at the frequency of the receiver first local signal and a portion of the signal is fed to a dual modulus counter formed by IC1 (MB504F) and IC2 in Z1. IC1 divides the incoming signal by 1/64 or 1/65 depending on the control line status sent from IC2. The output of the dual modulus counter is also a 12.5kHz and this signal is compared against the 12.5kHz reference signal in a phase comparator at IC2. The output signal from the phase comparator is then fed back to the RX VCO after going through a charge pump and a lowpass filter to maintain the RX VCO frequency.

If this RX frequency synthesizer phase locked loop becomes UNLOCK, the unlock condition is detected by IC2 and it prevents the transmitter frequency synthesizer from sending a transmitter signal to following amplifier stages in order to prevent an unauthorized transmission.

TX Frequency Synthesizer

The TX frequency synthesizer consists of three major circuits. They are the modulator/voltage controlled crystal oscillator (VCXO, Z6), TX voltage controlled oscillator (TX VCO, Z5) and TX phase locked loop unit (TX PLL, Z4).

The audio signal from the microphone amplifier and the Signaling unit is applied to the TX VCO (Z5) and the VCXO (Z6) operating at 12.8MHz to obtain an FM modulated signal. And its frequency stability is maintained within ±2.5ppm from –30°C to +60°C. This output signal is fed to the frequency synthesizer IC (IC2, JLC1075F) in Z4. At IC2, this signal is divided by 2560 to become a 5kHz reference signal.

The output from the TX VCO operates at the frequency of the transmit signal and a portion of the signal is fed to a dual modulus counter formed by IC1 and IC2 in Z4. IC1 divides the incoming signal by 1/64 and 1/65 depending on the control line status sent from IC2. The output of the dual modulus counter is also a 12.5kHz and this signal is compared against the 12.5kHz reference signal in a phase comparator at IC2. The output signal from the phase comparator is then fed back to the TX VCO after going through a charge pump and a lowpass filter to maintain the TX VCO frequency.

If this TX frequency synthesizer phase locked loop becomes UNLOCK, the unlock condition is detected by IC2 and it prevents the transmitter frequency synthesizer from sending a transmitter.

Microphone Amplifier

The audio signal originating at the microphone is applied to a microphone amplifier unit (Z7) after going through a microphone sensitivity control (VR1).

The signal is amplified and voltage limited by IC1 and IC2 in Z7, then applied to an active lowpass filter/pre-emphasis network (IC3).

The processed audio signal is sent to the modulator/voltage controlled crystal oscillator (VCXO, Z6) and voltage controlled oscillator (TX VCO, Z5) in the transmitter frequency synthesizer via IC3.

CIRCUIT DESCRIPTION

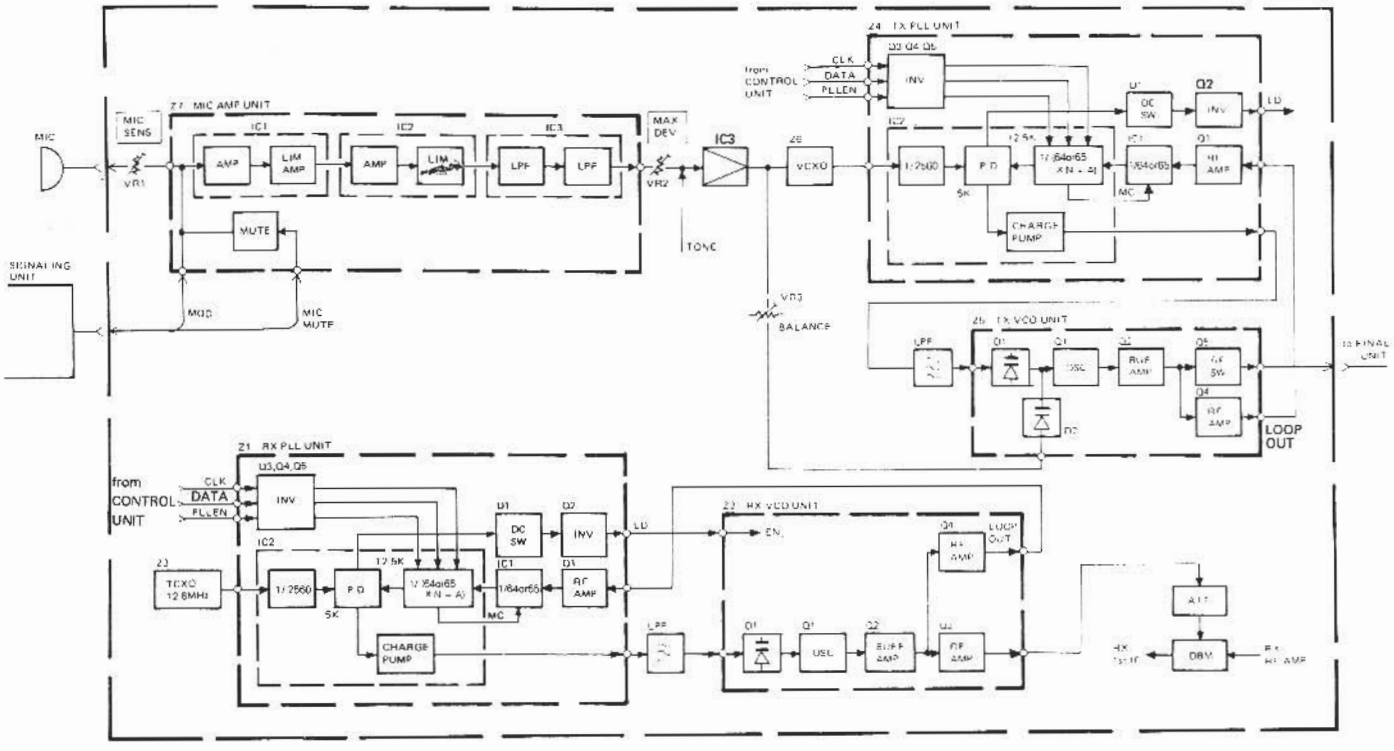

Fig. 4 PLL & Modulation circuit block diagram

Reset Circuit

Upon initial power up, the line voltage gradually increases and this causes the reset system (IC3) to generate a reset pulse. This reset pulse is applied to the microprocessor (IC1) to insure the initialization of the circuit.

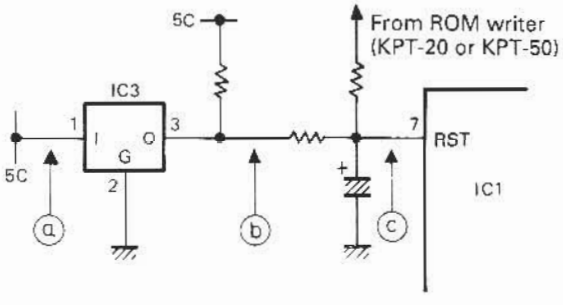

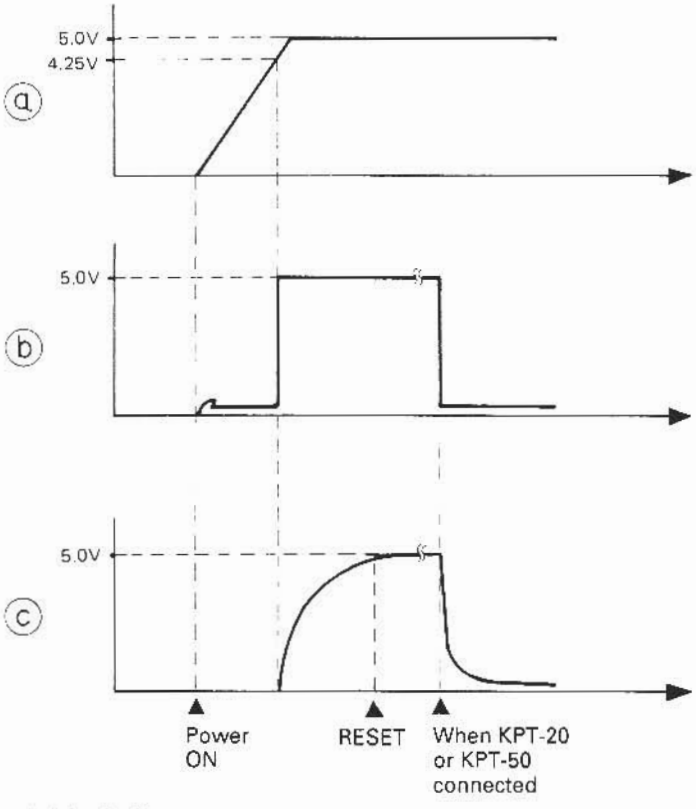

Fig. 5 Reset circuit block diagram

CIRCUIT DESCRIPTION

EEPROM Programming

Programming of data into the EEPROM (IC2) in the Display unit is done by connecting the KPT-20 or KPT-50 programmer to the transceiver by cable provided with the KPT-20 or KPT-50. When the programmer is connected to CN1 in the Display unit, this causes microprocessor IC1 to go into reset condition. In the reset condition, the output ports of IC1 becomes high impedance and are isolated from the data transfer lines. This permits data transfers between the programmer and the EEPROM.

Signaling Unit

- **Decoder operation**

The receive audio signal from the receiver section is fed to the Signaling unit. A part of this signal is returned to the receive audio amplifier circuit and fed to mute circuit after going through an active high-pass filter, in which any frequencies below 300Hz are removed. The mute circuit control a transfer audio signal by microprocessor. The other part of the audio signal is fed through a fifth-order active low-pass filter, of which the cut-off frequency is set at 220Hz, to discriminate the QT and DQT signals from other audio signals.

The QT tone obtained from the above filtered audio signal is applied to the microprocessor (IC11) as an analog signal for tone detection after being amplified by IC4 (2/2).

The DQT code is passed through a low-pass filter IC3 (2/2), of which the cut-off frequency is 140Hz, and the circuit consists of IC3 (1/2) and IC5 (1/2), where the DC drift component (low frequency) is removed from the signal. The signal is then amplified by IC5 (2/2). The amplified signal is applied to IC1 after waveform shaping by Q2.

IC11 sends an audio control signal (AC) to the AC terminal of CN1 through an inverter (Q4) according to the status of the incoming signal. If the incoming QT tone or DQT code matches the data stored, the AC terminal of CN1 is forced to become "LOW" to unmute the receive audio circuit.

- **Monitor circuit**

The RESET terminal of CN1 is connected to the MONITOR and MIC MONITOR circuits in the repeater.

The RESET terminal signal level goes to "HIGH" state, if either the MONITOR switch is on or the microphones MONITOR switch is on, causing pin 4 (RESET) of IC11 to become "HIGH". In this condition, the AC terminal of CN1 is held "LOW", enabling only the noise actuated squelch operation.

- **Encoder operation**

In the transmit mode, the PTT terminal of CN1 becomes "LOW" and this information is inverted to "HIGH" by Q7 before being applied to IC11. Upon receipt of this PTT signal or when the programmed tone has been decoded at the time of the REPEAT operation, IC11 starts the encode function. The encode signal is sent out from output ports, A/D 0 through A/D 7, of IC11 in a binary format and is fed to a ladder network resistor (CP1) for Digital-to-Analog signal conversion. The output signal from CP1, which is either the QT tone or the DQT code, is routed to the TONE terminal of CN1 after going through a level control for modulating the transmit signal.

- **Local/Repeater operation**

When the REPEAT switch on the front panel of the main body is set to ON, the repeater operation is engaged, while when this switch is set to OFF, the full-duplex transceiver operation is engaged.

- **Preset squelch operation**

The squelch circuit for the repeater operation which is independent from the main body consists of noise conditioner IC6 (1/2), waveform shaper Q1, microprocessor IC11 and squelch sensitivity adjuster VR1.

The preset squelch level, the hangup timer time and the time-out timer time are compared in IC11 respectively with the voltages at pins 30, 29 and 28 set by VR1, VR2 and VR3 with the reference of the voltage at pin 31 of IC11 and are thus subject to software control.

CIRCUIT DESCRIPTION

TAKEOVER Switch

The TAKEOVER switch is used to isolate the remote control. (The remote control is isolated when the TAKEOVER switch is pressed.)

The following table shows the functions and specifications of the accessory connector terminals, together with the control terminals that are subject to the TAKEOVER control.

- **Accessory connector (J101)**

No.	Name	Functions & Specifications	Terminal subject to TAKEOVER control
1	HK	External hook terminal / Set this terminal to GND level before using external PTT. Unlike MIC HOOK, no monitor function is provided. (TKR-720/N only)	○
2	LG	Line input GND / Used for No. 5 (LI).	
3	DI	Direct modulation input terminal / External input terminal for QT and DQT : ±750Hz DEV at approx. 600Ω input impedance, 0.2Vp-p. Degree of modulation is to be adjusted externally.	
4	DO	Direct detection output / Direct output of detected (unfiltered) signal : Output impedance 10kΩ. Output level : −10dBs at ±3kHz DEV, 1kHz.	
5	LI	Line input / Input terminal for external modulation. Standard modulation is provided at 600Ω, 0.24dBm. Same as MIKE level except for input level.	○
6	SG	Speaker output GND / GND for output to external speaker. Used for No. 12 (SO).	
7	SB	+13.6V external power output / Power supply for external equipment. Up to 1A.	
8	PT	External PTT input / Transmission is started at GND level if No. 1 (HK) is at GND level.	○
9	SI	Internal speaker input / Usually connected to No. 12 (SO) via jumper wire.	
10	LO	Line output / Used for output of received signal, for standard modulation at 600Ω, −10dBm. −6dB/oct, 300Hz to 3kHz. Interlocked with No.13 (CO).	○
11	GN	DC GND / GND for DC power supply.	
12	SO	Speaker output / Output terminal for external speaker.	
13	CO	Internal preset squelch output / Provides an output interlocked with internal preset squelch, or a tone squelch output when writing tone. When receiving signal, this output is at low level (open collector) with 10mA sink current.	
14	NC	Unused.	
15	NC	Unused.	

CIRCUIT DESCRIPTION

AVR Circuit

This power supply uses a tapped secondary transformer to maintain low voltage between the pass transistor collectors and emitters (Q5 and Q6) for excellent efficiency. Control and operating voltages are rectified and supplied independently for good ripple characteristics.

Temperature compensation for the regulator Zener diode D5 and error amplifier transistor Q4 is provided by silicon diodes D4 and D6.

At initial POWER-ON Q3 is ON to turn-down Q4 base voltage. This prevents a surge voltage from being output when no load is connected. As C5 charges, Q2 turns ON to shut Q3 OFF. Q4 is thereafter fully ON.

If the load is shorted, comparator Q1 is turned OFF and current proportional only to that in the initial turn-on circuit is output. When the output is shorted, the output current drops to 1A. This circuit protects the pass transistors, transformer and full wave bridge rectifies from thermal damage.

Changing between AC and DC is done with the DC switch (D101) for the TKR-720A only. The output from the AVR unit and the DC input from the external power input terminals are changed automatically.

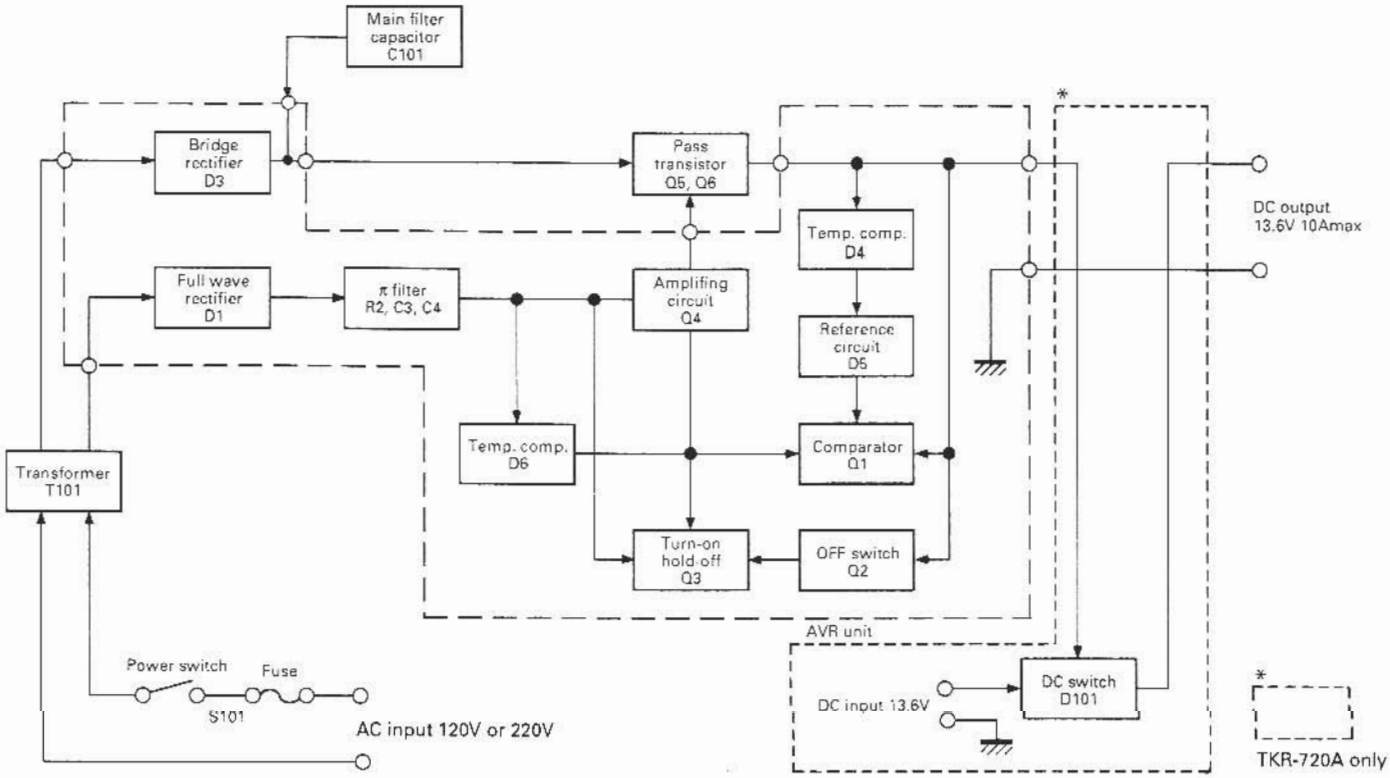

Fig. 6 AVR circuit block diagram

SEMICONDUCTOR DATA

JLC1075F : PLL system (TX PLL, RX PLL IC2)

- **Block diagram**

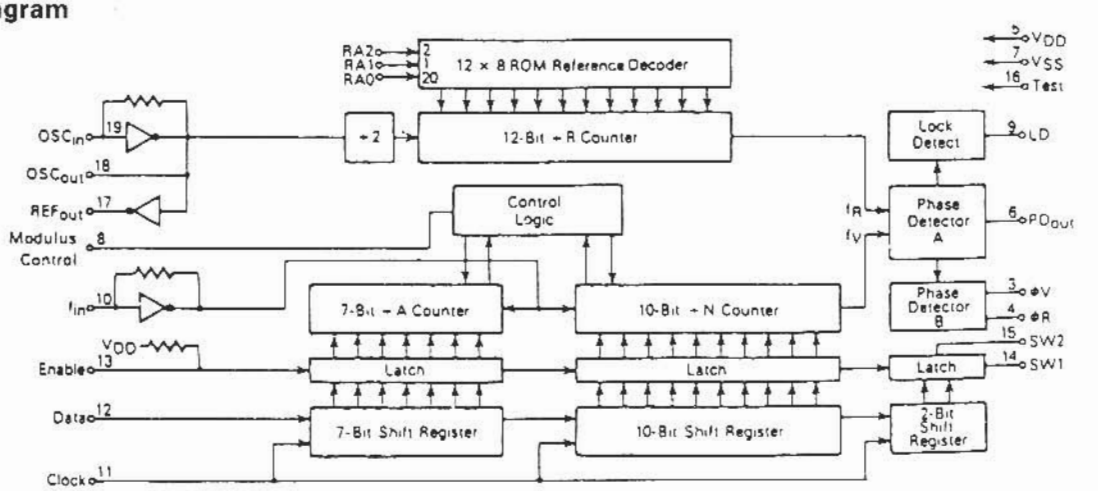

Reference Address Code			Total Divide Value
RA2	RA1	RA0	
0	0	0	8
0	0	1	64
0	1	0	128
0	1	1	256
1	0	0	1160
1	0	1	2560
1	1	0	1024
1	1	1	2048

- **Terminal connection diagram**

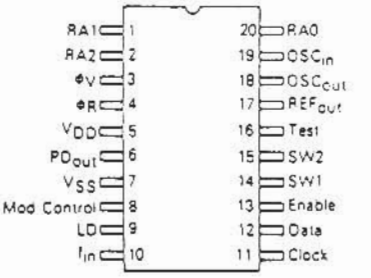

(Top view)

M51943BML : Reset system (Signaling unit IC2), Precision reference (Display unit IC3)

- **Terminal connection diagram**

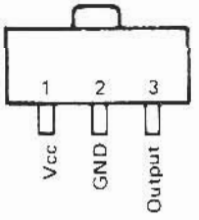

- **Block diagram**

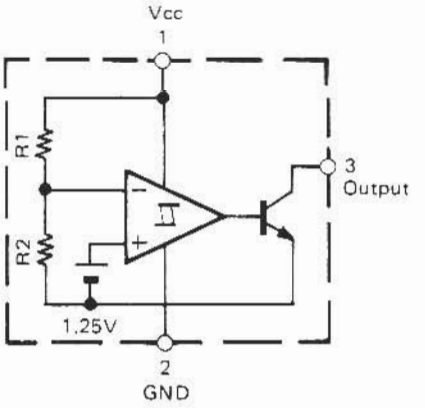

- **Timing chart**

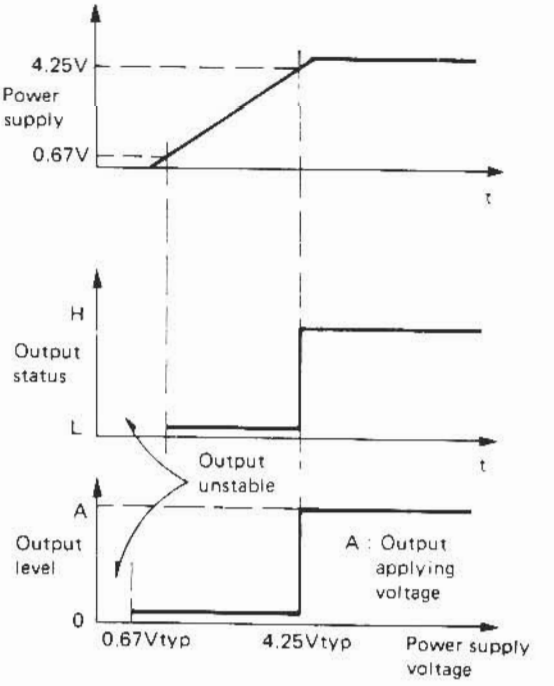

SEMICONDUCTOR DATA

M5222FP : Electronic attenuator (BPF/VCA IC3)

- **Terminal connection diagram**

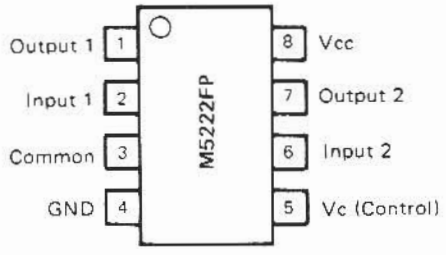

- **Equivalent circuit**

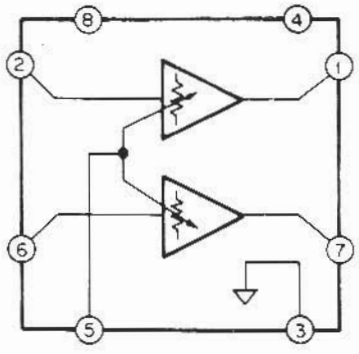

M57719, M57719L-24 : RF amplifier, TX driver (Final unit ass'y IC101)

- **Terminal connection diagram**

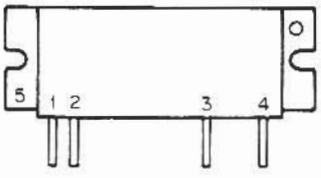

1 : Input
2 : Pre-drive + B
3 : Bias + B
4 : Final + B
5 : Output
6 : GND

- **Block diagram (M57719)**

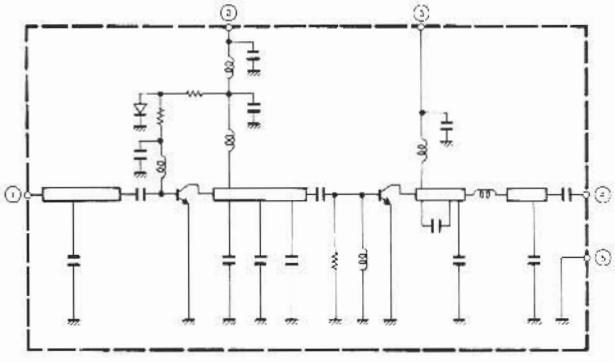

- **Block diagram (M57719L-24)**

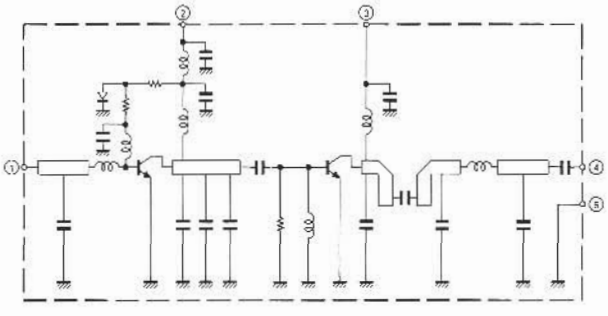

- **Electrical characteristics**

Symbol	Item	Condition	Rating (M57719)			Rating (M57719L-24)			Unit
			Min.	Typ.	Max.	Min.	Typ.	Max.	
PO	Output power	f = 145~174MHz (M57719)	14	16		14	16		W
ηT	Total efficiency	f = 136~150MHz (M57719L-24)	40	45		40	45		%
	2nd spurious	Vcc = 12.5V			−25			−25	dB
	Spurious after 3rd.	Pin = 0.2W			−35			−35	dB
ρ in	Input SWR	ZG = ZL = 50Ω			4			4	–
ρ out	Output SWR			1.8			2		–

SEMICONDUCTOR DATA

MB504F : Prescaler (TX PLL, RX PLL IC1)

- **Terminal connection diagram**

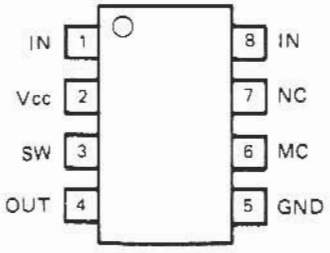

(Top view)

- **Function table**

SW	MC	Divide value
H	H	32
H	L	33
L	H	64
L	L	65

Note : SW terminal
H : Vcc, L : Open
MC terminal
H : 2.0V~Vcc, L : GND~0.8V

- **Explanation of terminal functions**

Pin No.	Symbol	Function
1	IN	Input.
2	Vcc	Power supply.
3	SW	Dividing ratio select pin.
4	OUT	Output.
5	GND	Ground.
6	MC	Module set pin.
7	NC	Not connection.
8	IN	Compensated input.

MB3756 : Voltage regulator (TX-RX unit IC2)

- **Electrical characteristics**

Item	Symbol	Condition	Rating Min.	Rating Typ.	Rating Max.	Unit
Input voltage range	V_{IN}		10.6	–	18	V
Output voltage	V_O		7.8	8.2	8.6	V
Input stability		$11V \le V_{IN} \le 18V$	–	20	100	mV
Load stability		(V_{O0}, V_{O1}) $1mA \le I_L \le 100mA$	–	15	80	mV
		(V_{O2}) $1mA \le I_L \le 200mA$	–	20	100	mV
Voltage difference between outputs	ΔV_O		–	10	50	mV
Peak output load	I_{SC}	(V_{O0}, V_{O1})	–	200	–	mA
		(V_{O2})	–	350	–	mA
Output voltage short-circuit current (Active "L")	V_{O1} (L)	$V_{IC} = 0.8V$	0	–	0.2	V
	V_{O2} (L)	$V_{IC} = 0.8V$	7.8	8.2	8.6	V
Output voltage short-circuit current (Active "H")	V_{O1} (H)	$V_{IC} = 2.0V$	7.8	8.2	8.6	V
	V_{O2} (H)	$V_{IC} = 2.0V$	0	–	0.2	V

(T_J = 25°C, V_{IN} = 14, R_{L0} = R_{L1} = 200Ω, R_{L2} = 100Ω)

- **Terminal connection diagram**

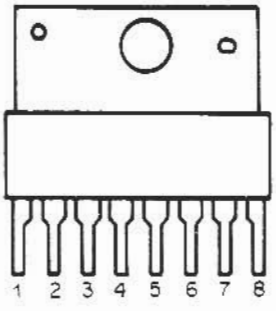

- **Equivalent circuit**

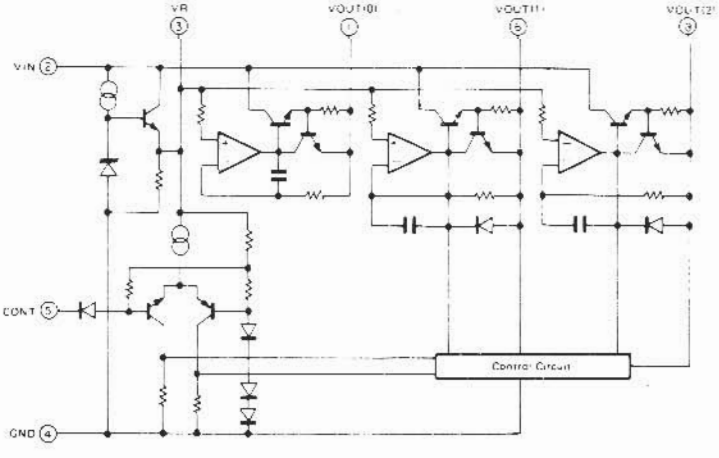

MC3361BD : IF system (IF IC1)

- **Block diagram**

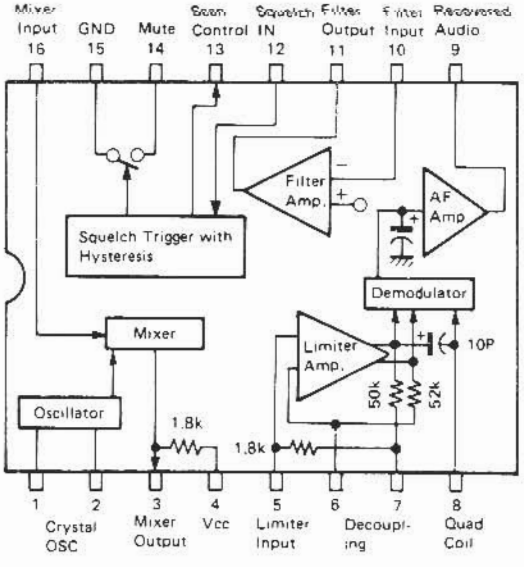

SEMICONDUCTOR DATA

XLJ93LC46 : EEPROM (Signaling unit IC10, Display unit IC2)

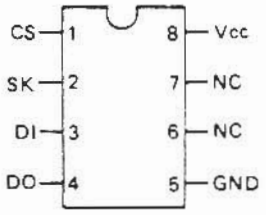

(Top view)

CS : Chip Select
SK : Serial Data Clock
DI : Serial Data Input
DO : Serial Data Output
Vcc : Power Supply
GND : Ground
NC : Not Connected

- **Instruction set for XLJ93LC46**

Instruction	SB	Op code	Address	Data	Comments
READ	1	10	A5A4A3A2A1A0		Read Register A5A4A3A2A1A0
WRITE	1	01	A5A4A3A2A1A0	D15~D0	Write Register A5A4A3A2A1A0
ERASE	1	11	A5A4A3A2A1A0		Erase Register A5A4A3A2A1A0
EWEN	1	00	11XXXX		Erase/Write Enable
EWDS	1	00	00XXXX		Erase/Write Disable
ERAL	1	00	10XXXX		Erase All Registers

XLJ93LC46 has 6 instructions as shown. Note that the MSB of any given instruction is a "1" and is viewed as a start bit in the interface sequence. The next 8 bits carry the op code and the 6-bit address for 1 of 64, 16-bit registers.

- **Timing chart (Continued)**

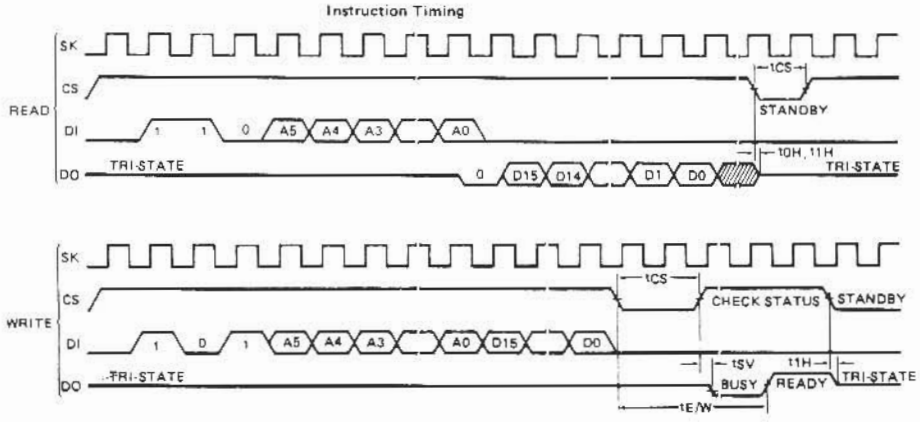

μPC1242H : AF power amplifier (TX-RX unit IC1)

- **Block diagram**

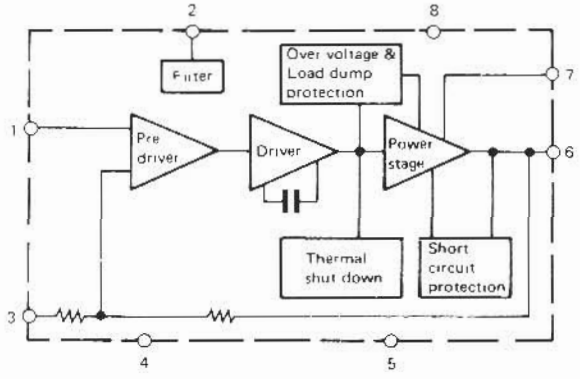

1 : Input
2 : Ripple filter
3 : N.F.B.
4 : GND
5 : GND
6 : Output
7 : Bootstrap
8 : Vcc

- **Electrical characteristics**

Item	Symbol	Condition	Rating			Unit
			Min.	Typ.	Max.	
DC current	Icc	υin = 0	25	45	80	mA
Output power	Po	T.H.D = 10%	5.0	5.8		W
		RL = 2Ω, T.H.D = 10%		9.2		W
Distortion	T.H.D.	Po = 0.5W		0.1	1.0	%
		RL = 2Ω, Po = 1W		0.4		%
Max. output power	POM			9.5		W
Voltage gain	Aυ	Po = 0.5W	49	51.5	54	dB
Noise output voltage	υn	RG = 10kΩ		1.4	4	mVrms

(Ta = 25°C, Vcc = 13.2V, f = 1kHz, RL = 4Ω)

SEMICONDUCTOR DATA

μPD78310AGF : Microprocessor (Signaling unit IC11)

- **Terminal connection diagram**

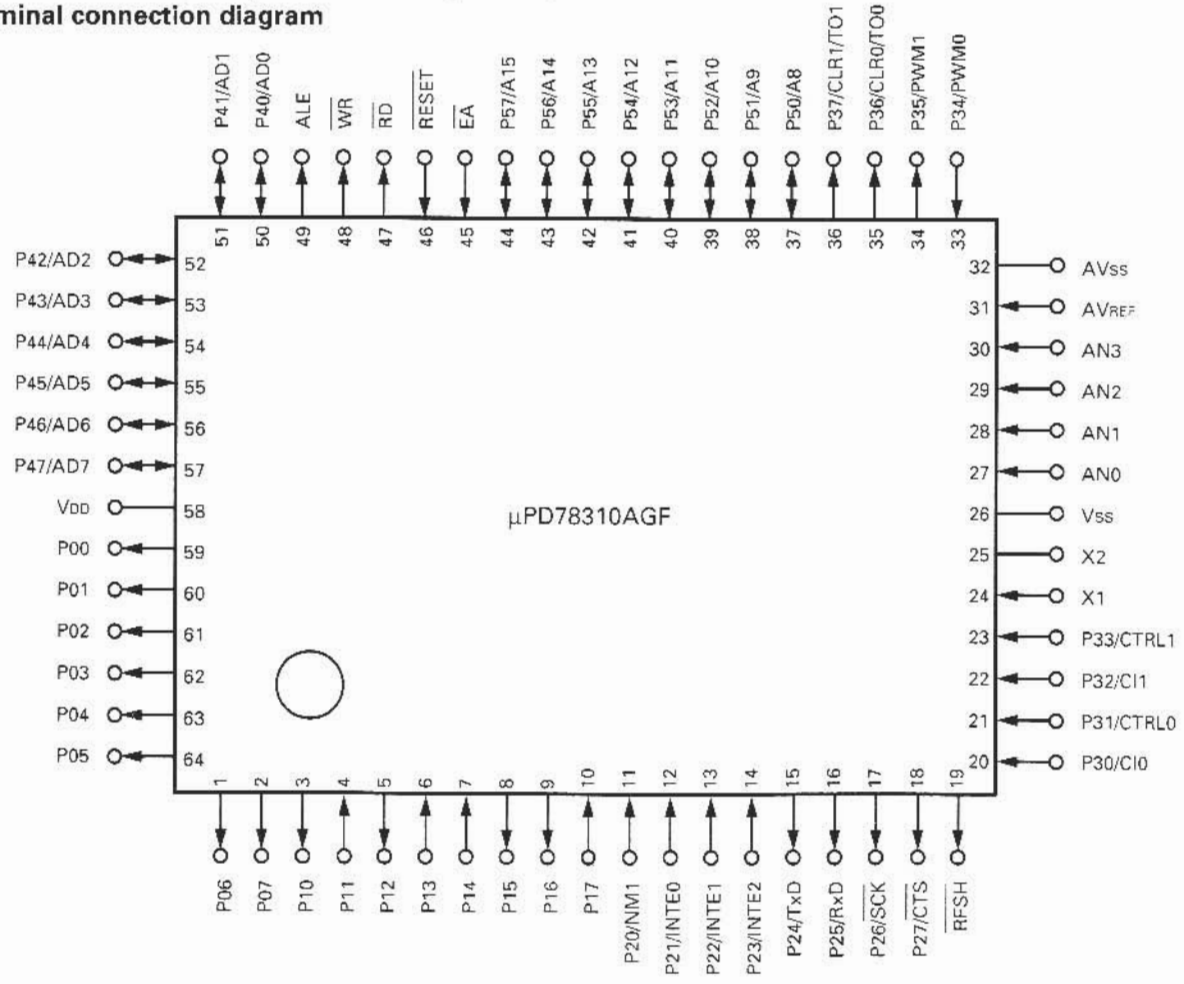

- **Explanation of terminal functions**

No.	Port	I/O	Signal name	No.	Port	I/O	Signal name
1, 2	P06, P07	O	A/D6, A/D7 (R-2R)	24, 25	X1, X2	–	X'tal
3	P10	O	Key	26	Vss	–	GND
4	P11	I	Reset	27	AN0	I	CTCSS IN
5	P12	O	AC	28	AN1	I	TOT VR
6	P13	I	LOC/REP	29	AN2	I	HUNG UP TIMER VR
7	P14	I	PTT	30	AN3	I	P-SQ VR
8	P15	O	TOR	31	AVREF	–	+5V
9	P16	O	TONE DET	32	AVss	–	GND
10	P17	I	DQT	33	P34/PWM0	I	DO (EEPROM)
11	P20/NM1	I	Check	34	P35/PWM1	O	DI (EEPROM)
12	P21/INTE0	I	CH CLK	35	P36/CLR0/TO0	O	CLK (EEPROM)
13	P22/INTE1	I	CH DATA	36	P37/CLR1/TO1	O	CS (EEPROM)
14	P23/INTE2	I	CH EN	37~44	P50/A8~P57/A15	CONT.	A8~A15 (EPROM)
15	P24/TxD	O	Not use.	45	$\overline{EA}$	CONT.	External access
16	P25/RxD	O	Mute	46	$\overline{RESET}$	CONT.	Power on reset
17	P26/$\overline{SCK}$	O	COR	47	$\overline{RD}$	CONT.	READ (EPROM)
18	P27/$\overline{CTS}$	O	Test	48	$\overline{WR}$	CONT.	WRITE (EPROM)
19	$\overline{RFSH}$	CONT.	Reflesh	49	ALE	CONT.	Address latch enable
20	P30/CI0	I	P-SQ	50~57	P40/AD0~P47/AD7	CONT.	AD0~AD7 (EPROM)
21	P31/CTRL0	I	W2	58	VDD	–	+5V
22	P32/CI1	I	W1	59~64	P00~P05	O	A/D0~A/D5 (R-2R)
23	P33/CTRL1	I	W4				

SEMICONDUCTOR DATA

- **Block diagram**

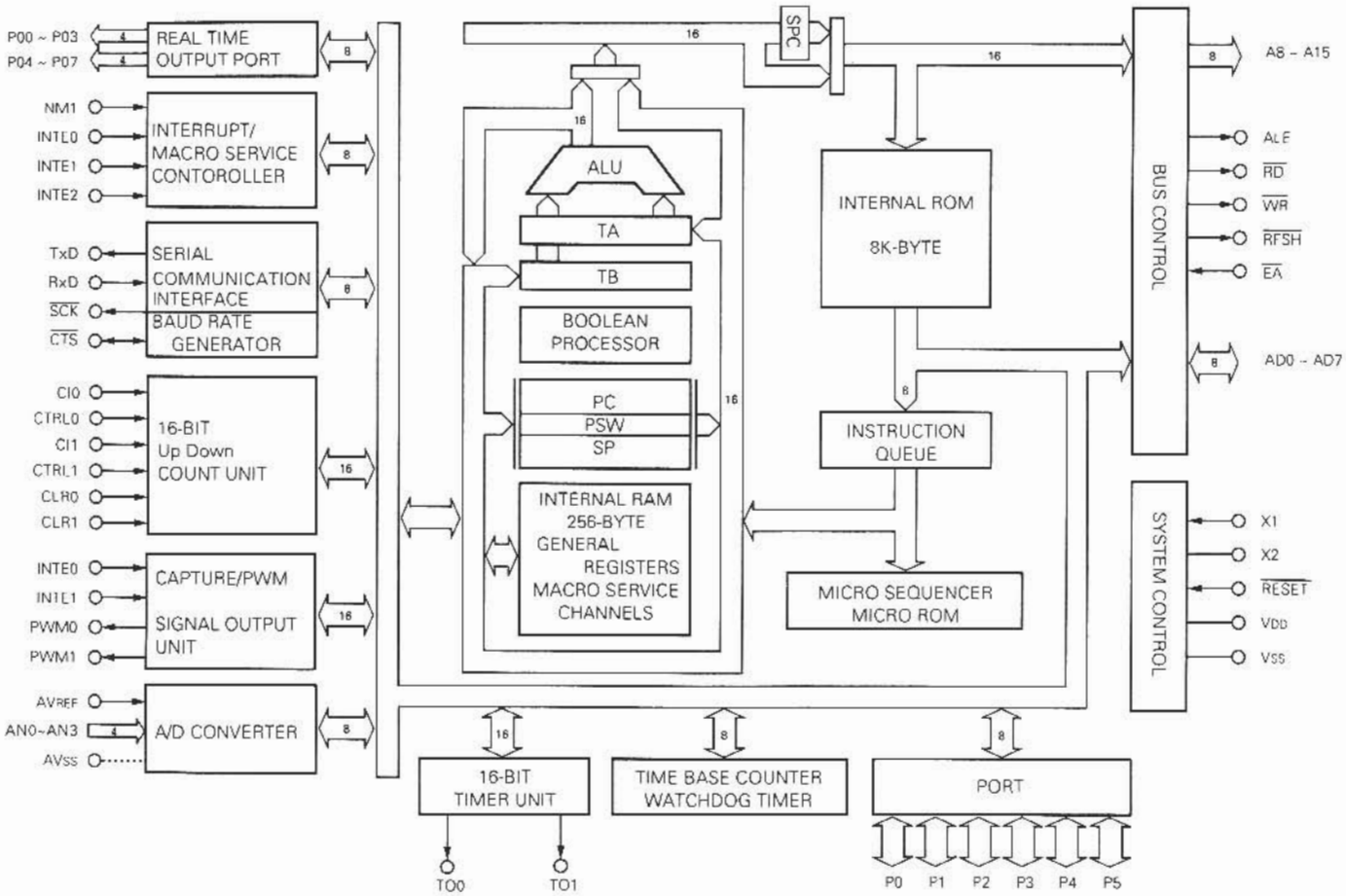

2SC2694 : Power amplifier (Final unit Q2)

- **Terminal connection diagram**

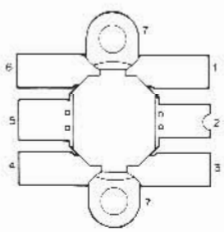

1 : Emitter
2 : Collector
3 : Emitter
4 : Emitter
5 : Base
6 : Emitter
7 : Flange

- **Electrical characteristics** (Tc = 25°C)

Item	Symbol	Condition	Rating			Unit
			MIN.	TYP.	MAX.	
Collector - base breakdown voltage	$V_{(BR)CBO}$	I_C = 20mA, I_E = 0	35			V
Emitter - base breakdown voltage	$V_{(BR)EBO}$	I_E = 20mA, I_C = 0	4			V
Collector - emitter breakdown voltage	$V_{(BR)CEO}$	I_C = 0.1A, R_{BE} = ∞	17			V
Collector cut-off current	I_{CBO}	V_{CB} = 15V, I_E = 0			5	mA
Emitter cut-off current	I_{EBO}	V_{EB} = 3V, I_C = 0			5	mA
DC current amplification factor	h_{FE}	V_{CE} = 10V, I_C = 1A	10	50	180	–
Output power	Po	f = 175MHz, V_{CC} = 12.5V,	70	75		W
Collector efficiency	η_C	Pin = 15W	60	70		%

SEMICONDUCTOR DATA

75104G-604-1B : Microprocessor (Display unit IC1)

- **Terminal connection diagram**

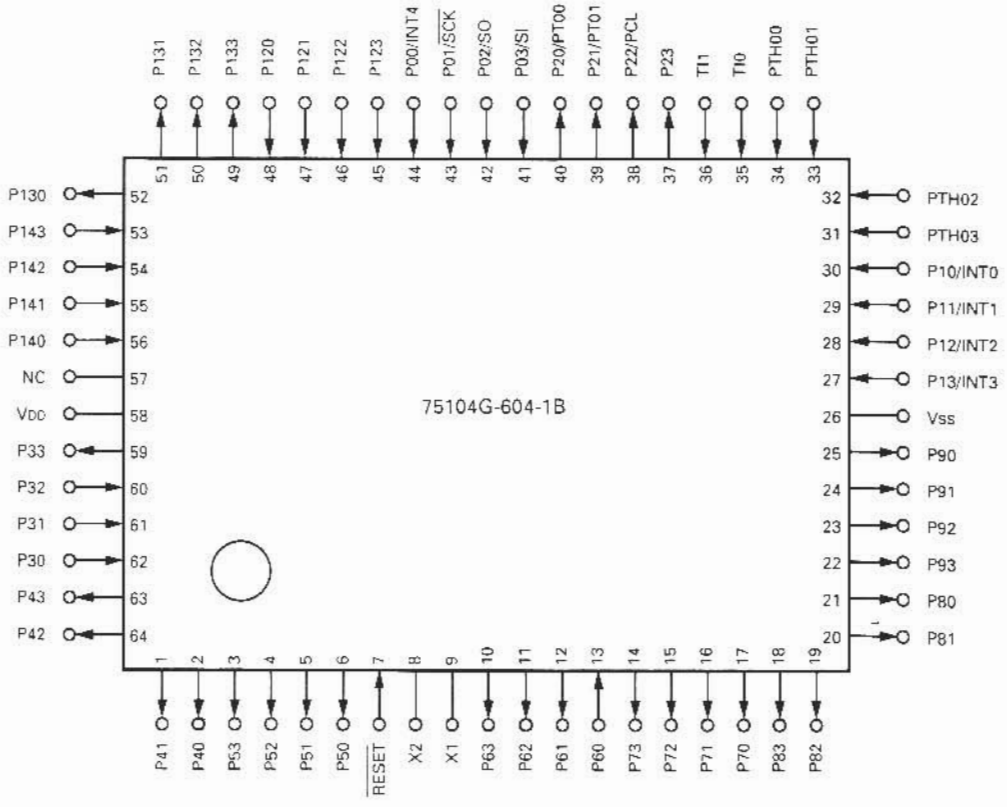

- **Explanation of terminal functions**

No.	Port	I/O	Signal name	No.	Port	I/O	Signal name
1, 2	P41, P40	O	LED (D23) b, a segment. (Active "H") TKR-720A only	37	P23	O	TX PLL EN. (Active "H")
3	P53	O	GND. (Active "L")	38	P22/PCL	O	T/R. (Active "L")
4~6	P52~P50	O	LED (D23) g~e segment. (Active "H") TKR-720A only	39	P21/PT1	O	PTT. (Active "L").
7	$\overline{\text{RESET}}$	I	System reset input.	40	P20/PT0	–	No connection.
8, 9	X2, X1	–	Crystal.	41	P03/SI	I	PTT (Remote).
10	P63	O	CS (EEPROM). (Active "L")	42	P02/SO	I	MON (Remote).
11	P62	O	CLK (EEPROM). (Active "L")	43	P01/$\overline{\text{SCK}}$	I	GND.
12	P61	O	DI (EEPROM). (Active "L")	44	P00/INT4	I	TAKEOVER switch.
13	P60	I	DO (EEPROM).	45	P123	I	MONI switch.
14	P73	O	CH CLK. (Active "L")	46	P122	I	REPEAT switch.
15	P72	O	CH DATA. (Active "L")	47	P121	I	KEY.
16	P71	O	PLL EN. (Active "H")	48	P120	I	BUSY.
17	P70	O	CH EN. (Active "L")	49	P133	O	TX LED. (Active "H")
18~21	P83~P80	O	LED (D22) d~a segment. (Active "H") TKR-720A only	50	P132	O	BUSY LED. (Active "H")
22	P93	O	GND. (Active "L")	51	P131	–	No connection.
23~25	P92~P90	O	LED (D22) g~e segment. (Active "H") TKR-720A only	52	P130	–	Not use.
26	Vss	–	GND.	53	P143	I	T.A/Not use.
27	P13/INT3	I	GND.	54	P142	I	Base/Rep.
28	P12/INT2	I	GND.	55	P141	I	VHF/UHF.
29	P11/INT1	I	ENC-A.	56	P140	I	Not use/Test.
30	P10/INT0	I	ENC-B.	57	NC (VPP)	–	No connection.
31	PTH03	I	F3.	58	VDD	–	+5V.
32	PTH02	I	F2.	59	P33	O	AUX. (Active "L")
33	PTH01	I	F1.	60	P32	I	CALL.
34	PTH00	I	F0.	61	P31	I	Serial input.
35	TI0	I	GND.	62	P30	I	Serial output.
36	TI1	I	GND.	63, 64	P43, P42	O	LED (D23) d, c segment. (Active "H") TKR-720A only

DESCRIPTION OF COMPONENTS

AVR UNIT (X43-3040-10)

Ref. No.	Parts No.	Descriptions
Q1~Q3	2SC2712(Y)	DC amplifier
Q4	2SB968(Q)	DC amplifier
Q5, Q6	2N5885	DC amplifier
D1	1B2C1	Rectifier
D3	S25VB10	Rectifier
D4	1SS181	Temperature compensate
D5	RD7.5E(B2)	Voltage reference
D6	1SS181	Temperature compensate

DRIVE UNIT (X45-3310-XX)

Ref. No.	Parts No.	Descriptions
Q101	2SC2954	RF amplifier
Q102	2SC2538-22-A	RF amplifier
Q103	2SB951A(Q)	DC amplifier
D101, 102	1SS181	Voltage reference

FINAL UNIT (X45-3320-XX)

Ref. No.	Parts No.	Descriptions
Q2	2SC2694	RF power amplifier
Q3, 4	2SC3326(A)	DC amplifier
D1	SG-5L(R)	Reverse polarity protection
D2, 3	1SS101	RF detector
D4	1SS181	Current steering
D5	1SS181	Voltage reference

2SC2782 (TO5H, 8A)

FINAL UNIT ASS'Y (X60-3230-XX)

Ref. No.	Parts No.	Descriptions
IC101	M57719 M57719L-24	RF amplifier (TX driver)

SIGNALING UNIT (X52-3140-10)

Ref. No.	Parts No.	Descriptions
IC1	MC78L05M	Voltage regulator 5V
IC2	M51943BML	Reset system
IC3	XRA4558F	Data recovery, active filter
IC4	XRA4558F	Active filter
IC5	XRA4558F	Data recovery
IC6, 7	XRA4558F	Active filter
IC8	27C256QJESB	EPROM
IC9	TC74HC573AF	Data latch
IC10	XLJ93LC46	EEPROM
IC11	µPD78310AGF	Microprocessor
Q1	DTC144EK	Level translator
Q2	DTC144EK	Inverter
Q3~7	DTC144EK	DC switch
Q8	DTA114EK	DC switch
Q9	2SC3326(A)	Audio amplifier
Q10	2SJ106(GR)	Audio amplifier
D1, 2	1SS184	Current steering
D3	HSM88AS	Voltage clamp
D4~6	1SS184	Current steering
D7	B30-0838-05	LED (Red)
D8	MTZ8.2JB	Voltage reference

DISPLAY UNIT (X54-3070-XX)

Ref. No.	Parts No.	Descriptions
IC1	75104G-604-1B	Microprocessor
IC2	XLJ93LC46	EEPROM
IC3	M51943BML	Precision reference
IC4	AN78N05	Voltage regulator 5V
IC5	µPC4558C	Audio amplifier
IC6	µPC4558C	Active filter
Q1, 2	DTC114EK	DC switch
Q3	2SA1162(Y)	Digital switch
Q6	2SC3326(A)	AF switch
Q7, 8	DTC114EK	DC switch
D1	B30-0855-05	LED (Red)
D2	B30-0856-05	LED (Green)
D3	B30-0855-05	LED (Red)
D4~6	1SS184	Voltage clamp
D7, 8	1SS181	Current steering
D10, 11	1SS181	Current steering
D13	1SS181	Current steering
D16	B30-0857-05	LED (Yellow)
D17	B30-0856-05	LED (Green)
D18	B30-0857-05	LED (Yellow)
D19, 21	1SS272	Current steering
D22, 23	B38-0308-05	LED display assy
D24	1SS133	Current steering

DESCRIPTION OF COMPONENTS

TX-RX UNIT (X57-3760-XX)

Ref. No.	Parts No.	Descriptions
IC1	μPC1242H	AF power amplifier
IC2	MB3756	Voltage regulator
IC3	NJM4558D	AF amplifier
IC4	L78N08	Voltage regulator
Q1, 2	2SC2712(Y)	Voltage shift
Q4, 5	2SK125	IF amplifier
Q6	2SK302(GR)	IF amplifier
Q7	2SC2712(Y)	level translator
Q8	DTC114EK	Inverter
Q9, 10	2SC3326(A)	Audio mute switch
Q11	DTC114EK	DC switch
Q12, 13	DTC114EK	Inverter
Q14, 15	2SK125	RF amplifier
D1, 2	1SV172	TX VCO output mute
D4	ND487C1T	Double balanced modulator
D5~11	1SS184	Current steering
D12	1SS226	Voltage clamp

RX PLL : Z1, TX PLL : Z4 (X58-3140-XX)

Ref. No.	Parts No.	Descriptions
IC1	MB504F	Prescaler
IC2	JLC1075F	PLL system(or JLC1075DW)
Q1	2SC2714(Y)	RF amplifier
Q2~5	DTC114EK	Inverter
D1	RD3.0M(B2)	Level shifter

RX VCO : Z2 (X58-3290-XX)

Ref. No.	Parts No.	Descriptions
Q1	2SK125	Oscillator
Q2	2SC2714(Y)	Buffer amplifier
Q3, 4	2SC3356	Buffer amplifier
D1	1SV166	Tuning

TX VCO : Z5 (X58-3790-XX)

Ref. No.	Parts No.	Descriptions
Q1	2SK125	Oscillator
Q2	2SC2714(Y)	Buffer amplifier
Q3, 4	2SC3356	RF amplifier
D1	1SV166	Tuning
D2	1SV164	Modulator

MIC AMP : Z7 (X59-3210-10)

Ref. No.	Parts No.	Descriptions
IC1	NJM4560M	Mic amplifier/Limitter
IC2	NJM4558M	Limitter
IC3	NJM4558M	Active filter
Q1	2SC3326(A)	Muting switch

IF : Z8 (X59-3220-10)

Ref. No.	Parts No.	Descriptions
IC1	MC3361BD	IF system
Q1	2SC2712(Y)	Noise amplifier
D1	DA204K	Noise detector

BPF/VCA : Z9 (X59-3230-10)

Ref. No.	Parts No.	Descriptions
IC1	NJM4558M	Audio amplifier
IC2	NJM4558M	Active filter
IC3	M5222FP	Electronic attenuator
IC4	NJM4558M	Active filter

PARTS LIST

× New Parts
Parts without Parts No. are not supplied.
Les articles non mentionnes dans le Parts No. ne sont pas fournis.
Teile ohne Parts No. werden nicht geliefert.

TKR-720/N/A

Ref. No. 参照番号	Address 位置	New Parts 新	Parts No. 部品番号	Description 部品名／規格	Destination 仕向	Remarks 備考
			TKR-720/N/A			
1	1A		A01-1059-01	CASE (UPPER)		
2	3A		A01-1060-01	CASE (LOWER)		
3	2C		A13-0684-11	FRAME		
4	3A		A20-2666-11	PANEL		
5	3A		A21-1519-03	DRESSING PLATE	KK2MM2	
5	3A		A21-1519-03	DRESSING PLATE	NMNM2	
6	3A		A21-1520-03	DRESSING PLATE(REPEAT,MONI)	KK2MM2	
6	3A		A21-1520-03	DRESSING PLATE(REPEAT,MONI)	NMNM2	
7	2A		A22-0758-01	SUB PANEL		
8	2B		A22-0759-02	SUB PANEL		
9	2B		A23-1508-12	REAR PANEL		
10	2A		A40-0623-02	BOTTOM PLATE (AVR)		
11	2A		A50-0409-03	SIDE PLATE		
12	2B		A50-0410-13	SIDE PLATE		
5	3A		B03-0578-03	DRESSING PLATE	AM AM2	
6	3A		B03-0579-03	DRESSING PLATE	AM AM2	
13	3A		B11-0461-04	FILTER		
			B42-3348-04	LABEL(TX)		
			B42-3349-04	LABEL(RX)		
			B42-3394-14	LABEL(COMPLIANCE NO.)	K	
			B42-3452-04	LABEL(T1.6A 250V)	MM2NM	
			B42-3452-04	LABEL(T1.6A 250V)	AM AM2	
			B42-3452-04	LABEL(T1.6A 250V)	NM2	
14	3F		B44-2163-04	LABEL(UPC)		
15	1F	*	B58-1011-00	CAUTION	NM NM2	
16	2B	*	B72-0118-14	MODEL NAME PLATE	K	
16	2B	*	B72-0119-14	MODEL NAME PLATE	K2	
16	2B		B72-0140-04	MODEL NAME PLATE	MNMAM	
16	2B		B72-0141-04	MODEL NAME PLATE	M2 AM2	
16	2B		B72-0141-04	MODEL NAME PLATE	NM2	
17	1A		B41-0659-14	CAUTION LABEL		
18	1F		B46-0409-40	WARRANTY CARD	KK2	
19	1F		B62-0066-10	INSTRUCTION MANUAL		
C101	1A		C90-2084-05	ELECTRO CAPA(AL) 68000UF 25WV		
			E31-3435-05	CONNECTING WIRE		
			E31-3437-15	CONNECTING WIRE (SP)		
			E31-3438-05	CONNECTING WIRE (RED)		
			E31-3439-15	CONNECTING WIRE (BLACK)		
			E31-3446-05	CONNECTING WIRE (2P) POWER SW		
			E40-5197-05	PIN CONNECTOR (7P)		
			E40-5198-05	PIN CONNECTOR (9P)		
			E40-5199-05	PIN CONNECTOR (11P)		
20	2B		E04-0183-05	RF COAXIAL RECEPTACLE(M-M)		
21	2C		E04-0172-05	RF COAXIAL RECEPTACLE(BNC)		
22	2C		E31-3469-05	CONNECTING WIRE (1P-1P)		
23	1B		E30-2125-05	AC POWER CORD	KK2	
23	1B		E30-2153-15	AC POWER CORD	MM2NM	
23	1B		E30-2153-15	AC POWER CORD	AM AM2	
23	1B		E30-2153-15	AC POWER CORD	NM2	
P101	2B		~~E31-3228-05~~	SHORT PLUG(ACCESSORY)		
W101	2B		~~E31-3390-05~~	CONNECTING WIRE		
W102			~~E31-3474-15~~	CONNECTING WIRE (9P,5P)		

L:Scandinavia K:USA P:Canada
Y:PX(Far East, Hawaii) T:England E:Europe
Y:AAFES(Europe) X:Australia M:Other Areas

TKR-720 : K,M,K2,M2
TKR-720N : M,M2
TKR-720A : M,M2

⚠ indicates safety critical components.

PARTS LIST

* New Parts
Parts without Parts No. are not supplied.
Les articles non mentionnes dans le Parts No. ne sont pas fournis.
Teile ohne Parts No. werden nicht geliefert.

TKR-720/N/A

Ref. No. 参照番号	Address 位置	New Parts 新	Parts No. 部品番号	Description 部品名／規格	Destination 仕向	Remarks 備考
W103			E31-3473-15	CONNECTING WIRE (11P)		
W106	2B		E37-0056-05	CONNECTING CABLE(BNC-M)		
W107	3C		E31-3341-05	CONNECTING WIRE (CH)	AM AM2	
24	1B,2E		F05-1623-05	FUSE (1.6A)	MM2NM	
24	1B,2E		F05-1623-05	FUSE (1.6A)	AM AM2	
24	1B,2E		F05-1623-05	FUSE (1.6A)	NM2	
24	1B,2E		F06-3024-05	FUSE (3A)	KK2	
25	2E		F51-0017-05	FUSE (15A)	AM AM2	
26	1B		F07-0878-04	COVER (REAR PANEL)	KK2M	
26	1B		F07-0878-04	COVER (REAR PANEL)	M2 NM	
26	1B		F07-0878-04	COVER (REAR PANEL)	NM2	
27	1D		F07-0881-04	COVER (HEAT SINK)		
28	2C		F11-1068-03	SHIELDING COVER (UPPER)		
29	2C		F11-1108-03	SHIELDING COVER(TX.RX FRONT)		
30	1C,3C		F11-1109-03	SHIELDING COVER(TX.RX UPP/LOW)		
32	2C		G02-0570-04	LEAF SPRING		
33	3A		G09-0405-05	SPRING (VOL,SQL,CH)		
34	2A		G13-0895-04	CUSHION(SP)		
35	3B,2A		G13-0912-14	CUSHION(PANEL)		
36	3E		H13-0820-04	PACKING FIXTUER		
38	3F		H52-0072-04	ITEM CARTON BOX		
39	1E		H10-2649-02	POLYSTYRENE FOAMED FIX(FRONT)		
40	2F		H10-2650-02	POLYSTYRENE FOAMED FIX(REAR)		
41	2F		H20-1414-03	PROTECTION COVER		
42	2E		H25-0029-04	PROTECTION BAG (60X110)		
43	2F		H25-0105-04	PROTECTION BAG (AC CORD)		
44	3E		H25-0103-04	PROTECTION BAG (DC CORD)	AM AM2	
45	3A		J02-0049-14	FOOT		
46	2B		J19-1433-05	LEAD HOLDER		
47	2D,3D		J21-4243-04	MOUNTING HARDWARE (TX.RX)		
48	1C,2C		J21-4244-04	MOUNTING HARDWARE (TX.RX)		
50	2A		J21-4246-04	MOUNTING HARDWARE		
51	2D		J21-4253-04	MOUNTING HARDWARE (HEAT SINK)		
52	2B		J42-0442-05	BUSHING (REAR PANEL)		
53	1B		J42-0489-05	BUSHING (AC CORD)		
54	2C		J42-0452-05	BUSHING		
55	2B		J42-0455-05	BUSHING		
56	2D,3D		J50-0401-05	HINGE		
57	2A,2B		J61-0023-05	WIRE BAND		
-			J61-0307-05	WIRE BAND		
60	3A		K29-3075-03	KNOB (CH)	AM AM2	
61	2A		K29-3146-04	KNOB (POWER)		
62	3A		K29-3147-03	KNOB (VOL,SQL)		
63	2B,3B		K29-3148-04	KNOB (TAKE,REPEAT,MONI)		
T101	1A		L01-8341-05	POWER TRANSFORMER	KK2	
T101	1A		L01-8347-05	POWER TRANSFORMER	MM2NM	
T101	1A		L01-8347-05	POWER TRANSFORMER	AM AM2	
T101	1A		L01-8347-05	POWER TRANSFORMER	NM2	
65	2B		N19-0631-05	FLAT WASHER(LEAD HOLDER)		
A	2A,2B		N09-0704-05	SCREW		
B	2C,2D		N09-2030-05	SCREW		
C	2B,2D		N32-3005-46	FLAT HEAD MACHINE SCREW(HING)		
D	1A,3B		N33-3006-45	OVAL HEAD MACHINE SCREW(CASE)		

L:Scandinavia K:USA P:Canada
Y:PX(Far East, Hawaii) T:England E:Europe
Y:AAFES(Europe) X:Australia M:Other Areas

TKR-720 : K,M,K2,M2
TKR-720N : M,M2
TKR-720A : M,M2

⚠ indicates safety critical components.

PARTS LIST

* New Parts
Parts without Parts No. are not supplied.
Les articles non mentionnes dans le Parts No. ne sont pas fournis.
Teile ohne Parts No. werden nicht geliefert.

TKR-720/N/A
DC BACK UP
MOUNTING BRACKET
AVR UNIT (X43-3040-10)

Ref. No. 参照番号	Address 位置	New Parts 新	Parts No. 部品番号	Description 部品名／規格	Destination 仕向	Remarks 備考
B	2B,2C		N35-3006-46	BINDING HEAD MACHINE SCREW		
F	1B		N35-3008-46	BINDING HEAD MACHINE (AVR HEAT		
G	1C		N35-2606-41	BINDING HEAD MACHINE (SIGNAL)		
H	2B,3C		N87-2606-46	BRAZIER HEAD TAPTITE SCREW		
I	2A,2D		N87-3008-46	BRAZIER HEAD TAPTITE SCREW		
J	1A		N87-4006-46	BRAZIER HEAD TAPTITE SCR(C101)		
K	3A		N87-4010-46	BRAZIER HEAD TAPTITE SCR(FOOT)		
S101	2A		S40-2450-05	PUSH SWITCH(POWER)		
SP101	3A		T07-0227-25	LOUDSPEAKER		
70	1B,2B		X43-3040-10	AVR UNIT		
71	1C		X52-3140-10	SIGNALING UNIT		
72	2B,3B		X54-3070-12	DISPLAY UNIT	KK2MM2	
72	2B,3B		X54-3070-12	DISPLAY UNIT	NMNM2	
72	2B,3B	*	X54-3070-14	DISPLAY UNIT	AM AM2	
73	3C		X57-3760-10	TX.RX UNIT	KMAM	
73	3C		X57-3760-11	TX.RX UNIT	K2M2	
73	3C		X57-3760-11	TX.RX UNIT	AM2	
73	3C	*	X57-3760-12	TX.RX UNIT	NM	
73	3C	*	X57-3760-13	TX.RX UNIT	NM2	
74	1D		X60-3230-10	FINAL UNIT ASSY	KMAM	
74	1D		X60-3230-11	FINAL UNIT ASSY	K2M2	
74	1D		X60-3230-11	FINAL UNIT ASSY	AM2	
74	1D	*	X60-3230-12	FINAL UNIT ASSY	NM	
74	1D	*	X60-3230-13	FINAL UNIT ASSY	NM2	
DC BACK UP						
76	3B		E30-2076-15	DC CORD (DC BACK UP)	AM AM2	
78	1B		E31-3389-15	CONNECTING WIRE(DC BACK UP)	AM AM2	
			E31-3455-15	CONNECTING WIRE(DC BACK UP)	AM AM2	
S	1A		N87-4014-46	BRAZIER HEAD TAPTITE SCREW	AM AM2	
D101	1B		S25VB10	DIODE (DC BACK UP)	AM AM2	
MOUNTING BRACKET						
			J21-4250-04	MOUNTING BRACKET		
			N09-0704-05	SCREW		
AVR UNIT (X43-3040-10)						
C1 ,2			CK73FB1H102K	CHIP C 1000PF K		
C3 ,4			C90-0814-05	ELECTRO 4700UF 25WV		
C5			CE04EW1A470M	ELECTRO 47UF 10WV		
C6 ,7			CK73FB1H102K	CHIP C 1000PF K		
C8 -11			CK73EB1H104K	CHIP C 0.10UF K		
C12			CK73FB1H102K	CHIP C 1000PF K		
C13			C90-0814-05	ELECTRO 4700UF 25WV		
C14 -16			CK73FB1H102K	CHIP C 1000PF K		
C17 -20			CK73EB1H104K	CHIP C 0.10UF K		
C101,102			C91-1075-05	CERAMIC 470PF		
C103			C91-1098-05	CERAMIC 4700PF AC400V		
CN1 ,2			E23-0462-05	TERMINAL		
CN3 ,4			E23-0611-05	TERMINAL		
CN5 -7			E23-0159-05	TERMINAL		
A3	1B		F01-0965-03	HEAT SINK		

L:Scandinavia K:USA P:Canada
Y:PX(Far East, Hawaii) T:England E:Europe
Y:AAFES(Europe) X:Australia M:Other Areas

TKR-720 : K,M,K2,M2
TKR-720N : M,M2
TKR-720A : M,M2

⚠ indicates safety critical components.

PARTS LIST

× New Parts
Parts without Parts No. are not supplied.
Les articles non mentionnes dans le Parts No. ne sont pas fournis.
Teile ohne Parts No. werden nicht geliefert.

AVR UNIT (X43-3040-10)
DRIVE UNIT (X45-3310-XX)

Ref. No. 参照番号	Address 位置	New Parts 新	Parts No. 部品番号	Description 部品名／規格	Destination 仕向	Remarks 備考
A5	1B		F07-0849-04	COVER		
			F20-1106-05	INSULATOR		
A9 -12	1B		F29-0432-05	INSULATOR		
A1 ,2			J13-0055-15	FUSE HOLDER		
A4	1B		J21-4247-04	MOUNTING HARDWARE		
A6 -8	1B		J32-0906-14	BOSS		
E	1B		N35-3006-46	BINDING HEAD MACHINE SCREW		
I	1B		N87-3008-46	BRAZIER HEAD TAPTITE SCREW		
L	1B		N35-3012-46	BINDING HEAD MACHINE SCREW		
M	1B		N87-4016-46	BRAZIER HEAD TAPTITE SCREW		
R2			RS14AB3A4R7J	FL-PROOF RS 4.7 J 1W		
R3 -5			RD41FB2B273J	CARBON 27K J 1/8W		
R6 ,7			R92-0619-05	FIXED RESISTOR 0.05 5W		
R8			RD41FB2B152J	CARBON 1.5K J 1/8W		
R9			RD41FB2B102J	CARBON 1K J 1/8W		
R10 -12			RD41FB2B391J	CARBON 390 J 1/8W		
R13			RD41FB2B683J	CARBON 68K J 1/8W		
R14			RD41FB2B822J	CARBON 8.2K J 1/8W		
VR1			R12-0440-05	TRIMMING POT.680		
VR2			R12-8406-05	TRIMMING POT.1M		
D1			1B2C1	DIODE		
D3	1B		S25VB10	DIODE		
D4			1SS181	CHIP DIODE		
D5			RD7.5E(B2)	CHIP ZENER DIODE		
D6			1SS181	CHIP DIODE		
Q1 -3			2SC2712(Y)	CHIP TRANSISTOR		
Q4			2SB968(Q)	CHIP TRANSISTOR		
Q5 ,6	1B		2N5885	TRANSISTOR		
DRIVE UNIT (X45-3310-XX) 10 : K,M,AM,NM 11 : K2,M2,AM2,NM2						
C101			CC73FCH1H680J	CHIP C 68PF J		
C102,103			CK73FB1H102K	CHIP C 1000PF K		
C104			CC73FCH1H220J	CHIP C 22PF J		
C105			CC73FCH1H560J	CHIP C 56PF J		
C106,107			CK73FB1H102K	CHIP C 1000PF K		
C108			CC73FCH1H180J	CHIP C 18PF J		
C110			CK73FB1H102K	CHIP C 1000PF K		
C111			CK73FB1E473K	CHIP C 0.047UF K		
C112			C90-2021-05	ELECTRO 10UF 25WV		
C113			CK73EB1H102K	CHIP C 1000PF K		
C114			CK73EB1H473K	CHIP C 0.047UF K		
C115			C90-2021-05	ELECTRO 10UF 25WV		
C116-118			CK73FB1H102K	CHIP C 1000PF K		
C119			C90-2044-05	ELECTRO 1UF 25WV		
C120			C90-2086-05	ELECTRO 22UF 20WV	K2 M2	
C120			C90-2086-05	ELECTRO 22UF 20WV	AM2NM2	
CN101			E04-0159-05	RF COAXIAL CABLE RECEPTACLE		
CN102			E40-0608-05	PIN CONNECTOR (6P)		
L101			L40-6872-80	SMALL FIXED INDUCTOR		
L102			L34-0742-05	COIL(5T)		
L103,104			L34-1087-05	COIL(5T)		
R101			RK73FB2A271J	CHIP R 270 J 1/10W		
R102			RK73FB2A180J	CHIP R 18 J 1/10W		

L:Scandinavia K:USA P:Canada
Y:PX(Far East, Hawaii) T:England E:Europe
Y:AAFES(Europe) X:Australia M:Other Areas

TKR-720 : K,M,K2,M2
TKR-720N : M,M2
TKR-720A : M,M2

⚠ indicates safety critical components.

PARTS LIST

* New Parts
Parts without Parts No. are not supplied.
Les articles non mentionnes dans le Parts No. ne sont pas fournis.
Teile ohne Parts No. werden nicht geliefert.

DRIVE UNIT (X45-3310-XX)
FINAL UNIT (X45-3320-XX)

Ref. No. 参照番号	Address 位置	New Parts 新	Parts No. 部品番号	Description 部品名／規格				Destination 仕向	Remarks 備考
R103			RK73FB2A180J	CHIP R	18	J	1/10W	KMAMNM	
R103			RK73FB2A330J	CHIP R	33	J	1/10W	K2M2	
R103			RK73FB2A330J	CHIP R	33	J	1/10W	AM2NM2	
R104			RK73FB2A470J	CHIP R	47	J	1/10W		
R105			RK73FB2A152J	CHIP R	1.5K	J	1/10W		
R106			RK73FB2A220J	CHIP R	22	J	1/10W		
R107			RK73FB2A470J	CHIP R	47	J	1/10W		
R108			RK73FB2A152J	CHIP R	1.5K	J	1/10W		
R109			RK73FB2A331J	CHIP R	330	J	1/10W		
R110			RS14DB3A100J	FL-PROOF RS	10	J	1W		
R111			RD14BB2E271J	RD	270	J	1/4W	KMAMNM	
R111			RD14BB2E151J	RD	150	J	1/4W	K2 M2	
R111			RD14BB2E151J	RD	150	J	1/4W	AM2NM2	
R112			RD14BB2E180J	RD	18	J	1/4W	KMAMNM	
R112			RD14BB2E390J	RD	39	J	1/4W	K2 M2	
R112			RD14BB2E390J	RD	39	J	1/4W	AM2NM2	
R113			RD14BB2E271J	RD	270	J	1/4W	KMAMNM	
R113			RD14BB2E151J	RD	150	J	1/4W	K2 M2	
R113			RD14BB2E151J	RD	150	J	1/4W	AM2NM2	
R114			RK73FB2A102J	CHIP R	1.0K	J	1/10W		
D101,102			1SS181	DIODE					
IC101			M57719	IC(POWER MODULE/ 145-175MHz)				KMAMNM	
IC101			M57719L-24	IC(POWER MODULE/ 136-150MHz)				K2M2	
IC101			M57719L-24	IC(POWER MODULE/ 136-150MHz)				AM2NM2	
Q101			2SC2954	TRANSISTOR					
Q102			2SC2538-22-A	TRANSISTOR					
Q103			2SB951A(Q)	TRANSISTOR					
FINAL UNIT (X45-3320-XX) 11 : K,M,AM,NM 12 : K2,M2,AM2,NM2									
C1			CM73F2H220J	CHIP C	22PF	J			
C2			CM73F2H470J	CHIP C	47PF	J		K2 M2	
C2			CM73F2H470J	CHIP C	47PF	J		AM2NM2	
C3			CM73F2H240J	CHIP C	24PF	J		KMAMNM	
C3			CM73F2H270J	CHIP C	27PF	J		K2M2	
C3			CM73F2H270J	CHIP C	27PF	J		AM2NM2	
C5			CM73F2H471J	CHIP C	470PF	J			
C7			CM73F2H121J	CHIP C	120PF	J		KMAMNM	
C7			CM73F2H181J	CHIP C	180PF	J		K2M2	
C7			CM73F2H181J	CHIP C	180PF	J		AM2NM2	
C10 ,11			~~CM73F2H221J~~	CHIP C	~~220PF~~	J			
C14 ,15			~~CM73F2H151J~~	CHIP C	~~150PF~~	J			
C20			CE04EW1E221M	ELECTRO	220UF	25WV			
C21			C90-2021-05	ELECTRO	10UF	25WV			
C22			CK73EB1H473K	CHIP C	0.047UF	K			
C23			CK73EB1H102K	CHIP C	1000PF	K			
C25			CM73F2H121J	CHIP C	120PF	J		KMAMNM	
C25		*	CM73F2H161J	CHIP C	160PF	J		K2 M2	
C25		*	CM73F2H161J	CHIP C	160PF	J		AM2NM2	
C27			CM73F2H471J	CHIP C	470PF	J			
C28			CM73F2H101J	CHIP C	100PF	J		KMAMNM	
C28			CM73F2H121J	CHIP C	120PF	J		K2M2	
C28			CM73F2H121J	CHIP C	120PF	J		AM2NM2	
C29 ,30			CM73F2H360J	CHIP C	36PF	J		KMAMNM	
C29 ,30			CM73F2H390J	CHIP C	39PF	J		K2M2	
C29 ,30			CM73F2H390J	CHIP C	39PF	J		AM2NM2	

L:Scandinavia K:USA P:Canada
Y:PX(Far East, Hawaii) T:England E:Europe
Y:AAFES(Europe) X:Australia M:Other Areas

TKR-720 : K,M,K2,M2
TKR-720N : M,M2
TKR-720A : M,M2

⚠ indicates safety critical components.

PARTS LIST

* New Parts
Parts without Parts No. are not supplied.
Les articles non mentionnes dans le Parts No. ne sont pas fournis.
Teile ohne Parts No. werden nicht geliefert.

FINAL UNIT (X45-3320-XX)
SIGNALING UNIT (X52-3140-10)

Ref. No. 参照番号	Address 位置	New Parts 新	Parts No. 部品番号	Description 部品名／規格	Destination 仕向	Remarks 備考
C31			CM73F2H471J	CHIP C 470PF J		
C32			CM73F2H180J	CHIP C 18PF J	KMAMNM	
C32			CM73F2H220J	CHIP C 22PF J	K2M2	
C32			CM73F2H220J	CHIP C 22PF J	AM2NM2	
C33			CM73F2H510J	CHIP C 51PF J	K2M2	
C33			CM73F2H510J	CHIP C 51PF J	AM2NM2	
C33 ,34			CM73F2H390J	CHIP C 39PF J	KMAMNM	
C34			CM73F2H470J	CHIP C 47PF J	K2M2	
C34			CM73F2H470J	CHIP C 47PF J	AM2NM2	
C35			CM73F2H180J	CHIP C 18PF J	KMAMNM	
C36			CC73FCH1H0R5C	CHIP C 0.5PF C		
C37			CK73FB1H102K	CHIP C 1000PF K		
C38			CC73FCH1H050C	CHIP C 5PF C		
C39 ,40			CK73FB1H102K	CHIP C 1000PF K		
C42 -44			CK73FB1H102K	CHIP C 1000PF K		
C47 -49			CK73FB1H102K	CHIP C 1000PF K		
A1			E29-0468-14	TERMINAL(ANT)		
CN2 ,3			E23-0491-15	TERMINAL		
CN4			E40-5166-05	PIN CONNECTOR(6P)		
W1			E31-3273-05	CONNECTING WIRE(5P)		
W8			E33-1855-00	FINISHED WIRE SET		
L1			L34-0951-05	COIL(2.5T)	K2 M2	
L1			L34-0951-05	COIL(2.5T)	AM2NM2	
L1			L34-1039-05	COIL(1.5T)	KMAMNM	
L2			L39-0421-04	COIL		
L4			L34-0452-05	COIL(6T)		
L6			L92-0110-05	FERRITE BEAD		
L9 ,10			L34-1139-05	COIL(0.5T)		
L12			L33-0649-05	CHOKE COIL		
L13 ,14			L34-1232-15	COIL(3.5T)		
L15			L34-1231-15	COIL(1.5T)		
L16			L40-1092-14	SMALL FIXED INDUCTOR		
L18			L34-1231-15	COIL (1.5T)		
L21			L39-0421-04	COIL		
R3			RS14AB3A101J	FL-PROOF RS 100 J 1W		
R5			RS14DB2H151J	FL-PROOF RS 150 J 1/2W		
R6			RS14DB2H181J	FL-PROOF RS 180 J 1/2W		
R7			RK73FB2A561J	CHIP R 560 J 1/10W		
R9			R92-0670-05	CHIP R 0 OHM		
R10			RK73FB2A472J	CHIP R 4.7K J 1/10W		
R11			RK73FB2A101J	CHIP R 100 J 1/10W		
R12			RK73FB2A103J	CHIP R 10K J 1/10W		
R13			RK73FB2A822J	CHIP R 8.2K J 1/10W		
R17			RK73FB2A222J	CHIP R 2.2K J 1/10W		
VR1			R12-3430-05	TRIMMING POT.(10K)		
D1			SG-5L(R)	DIODE		
D2 ,3			1SS101	DIODE		
D4 ,5			1SS181	DIODE		
Q2			2SC2694	TRANSISTOR		
Q3 ,4			2SC3326(A)	TRANSISTOR		
SIGNALING UNIT (X52-3140-10)						
C1			CE04NW1E220M	ELECTRO 22UF 25WV		
C2 ,3			CK73FB1H103K	CHIP C 0.010UF K		

L:Scandinavia K:USA P:Canada
Y:PX(Far East, Hawaii) T:England E:Europe
Y:AAFES(Europe) X:Australia M:Other Areas

TKR-720 : K,M,K2,M2
TKR-720N : M,M2
TKR-720A : M,M2

⚠ indicates safety critical components.

PARTS LIST

* New Parts
Parts without Parts No. are not supplied.
Les articles non mentionnes dans le Parts No. ne sont pas fournis.
Teile ohne Parts No. werden nicht geliefert.

SIGNALING UNIT (X52-3140-10)

Ref. No. 参照番号	Address 位置	New Parts 新	Parts No. 部品番号	Description 部品名／規格	Destination 仕向	Remarks 備考
C4			CE04NW1C470M	ELECTRO 47UF 16WV		
C5			C92-0004-05	ELECTRO 1.0UF 16WV		
C6			CK73FB1H103K	CHIP C 0.010UF K		
C7			CC73FCH1H101J	CHIP C 100PF J		
C8			C92-0011-05	CHIP TAN 10UF 4WV		
C9			CK73EB1E333K	CHIP C 0.033UF K		
C10			CK73FB1H332K	CHIP C 3300PF K		
C11			CK73EB1H683K	CHIP C 0.068UF K		
C12			CK73FB1H152K	CHIP C 1500PF K		
C13			CK73EB1H104K	CHIP C 0.10UF K		
C14 ,15			CK73FB1H103K	CHIP C 0.010UF K		
C16			C92-0011-05	CHIP TAN 10UF 4WV		
C17			C92-0003-05	CHIP TAN 0.47UF 25WV		
C18 ,19			CC73FCH1H100D	CHIP C 10PF D		
C20			CK73FB1H183K	CHIP C 0.018UF K		
C21			CK73FB1H102K	CHIP C 1000PF K		
C22			CK73EB1E473K	CHIP C 0.047UF K		
C23			CK73EB1E333K	CHIP C 0.033UF K		
C24 ,25			C92-0004-05	ELECTRO 1.0UF 16WV		
C26 -28			CC73FCH1H101J	CHIP C 100PF J		
C29			CK73FB1H103K	CHIP C 0.010UF K		
C30			C92-0011-05	CHIP TAN 10UF 4WV		
C31			CK73FB1H103K	CHIP C 0.010UF K		
C32			C92-0004-05	ELECTRO 1.0UF 16WV		
C33			CK73EB1H104K	CHIP C 0.10UF K		
C34			C92-0004-05	ELECTRO 1.0UF 16WV		
C35 -38			CK73FB1H153K	CHIP C 0.015UF K		
C39			C92-0502-05	ELECTRO 0.33UF 35WV		
C40 ,41			C92-0004-05	ELECTRO 1.0UF 16WV		
C42			CK73FB1H103K	CHIP C 0.010UF K		
C43 -46			CK73FF1E104Z	CHIP C 0.1UF Z		
			E02-2010-05	IC SOCKET (8P)		
			E02-2015-05	IC SOCKET (28P)		
CN1			E40-3256-05	PIN CONNECTOR(12P)		
CN2			E40-3248-05	PIN CONNECTOR(4P)		
CN3			E40-3247-05	PIN CONNECTOR(3P)		
TP1 ,2			E23-0467-05	TERMINAL		
W1 ,2			E31-1448-05	WIRE		
W4			E31-1448-05	WIRE		
W104			E31-3254-05	CONNECTING WIRE		
W105			E31-3255-05	CONNECTING WIRE		
X1			L77-1374-05	CRYSTAL RESONATOR (12MHZ)		
CP1			R90-0598-05	MULTI-COMP 10K/20K		
R1			RK73FB2A100J	CHIP R 10 J 1/10W		
R2			RK73FB2A473J	CHIP R 47K J 1/10W		
R3			RK73FB2A102J	CHIP R 1.0K J 1/10W		
R4 ,5			RK73FB2A473J	CHIP R 47K J 1/10W		
R6 ,7			RK73FB2A273J	CHIP R 27K J 1/10W		
R8			RK73FB2A684J	CHIP R 680K J 1/10W		
R9			R92-0670-05	CHIP R 0 OHM		
R10			RK73FB2A104J	CHIP R 100K J 1/10W		
R11 -13			RK73FB2A683J	CHIP R 68K J 1/10W		
R14			RK73FB2A753J	CHIP R 75K J 1/10W		

L:Scandinavia K:USA P:Canada
Y:PX(Far East, Hawaii) T:England E:Europe
Y:AAFES(Europe) X:Australia M:Other Areas

TKR-720 : K,M,K2,M2
TKR-720N : M,M2
TKR-720A : M,M2

⚠ indicates safety critical components.

PARTS LIST

* New Parts
Parts without Parts No. are not supplied.
Les articles non mentionnes dans le Parts No. ne sont pas fournis.
Teile ohne Parts No. werden nicht geliefert.

SIGNALING UNIT (X52-3140-10)
DISPLAY UNIT (X54-3070-XX)

Ref. No. 参照番号	Address 位置	New Parts 新	Parts No. 部品番号	Description 部品名／規格	Destination 仕向	Remarks 備考
R15			RK73FB2A563J	CHIP R 56K J 1/10W		
R16 -19			RK73FB2A473J	CHIP R 47K J 1/10W		
R20			RK73FB2A123J	CHIP R 12K J 1/10W		
R21			RK73FB2A153J	CHIP R 15K J 1/10W		
R22 ,23			RK73FB2A103J	CHIP R 10K J 1/10W		
R24 ,25			RK73FB2A394J	CHIP R 390K J 1/10W		
R26			RK73FB2A473J	CHIP R 47K J 1/10W		
R27 -29			RK73FB2A124J	CHIP R 120K J 1/10W		
R30			RK73FB2A183J	CHIP R 18K J 1/10W		
R31			RK73FB2A221J	CHIP R 220 J 1/10W		
R32 ,33			RK73FB2A393J	CHIP R 39K J 1/10W		
R34			RK73FB2A225J	CHIP R 2.2M J 1/10W		
R35 -37			RK73FB2A473J	CHIP R 47K J 1/10W		
R38			R92-0670-05	CHIP R 0 OHM		
R39 -41			RK73FB2A473J	CHIP R 47K J 1/10W		
R42 -45			RK73FB2A102J	CHIP R 1.0K J 1/10W		
R46 -50			RK73FB2A473J	CHIP R 47K J 1/10W		
R51			RK73FB2A223J	CHIP R 22K J 1/10W		
R52			RK73FB2A331J	CHIP R 330 J 1/10W		
R53			RK73FB2A394J	CHIP R 390K J 1/10W		
R54			RK73FB2A474J	CHIP R 470K J 1/10W		
R55			RK73FB2A622J	CHIP R 6.2K J 1/10W		
R56			RK73FB2A563J	CHIP R 56K J 1/10W		
R57			RK73FB2A683J	CHIP R 68K J 1/10W		
R58			RK73FB2A153J	CHIP R 15K J 1/10W		
R59 ,60			RK73FB2A222J	CHIP R 2.2K J 1/10W		
R61			RK73FB2A104J	CHIP R 100K J 1/10W		
R62 ,63			RK73FB2A473J	CHIP R 47K J 1/10W		
R64			RK73FB2A102J	CHIP R 1.0K J 1/10W		
R65			RK73FB2A471J	CHIP R 470 J 1/10W		
R66			RK73FB2A473J	CHIP R 47K J 1/10W		
VR1 -5			R12-3099-05	TRIMMING POT.47K		
D1 ,2			1SS184	CHIP DIODE		
D3			HSM88AS	CHIP DIODE		
D4 -6			1SS184	CHIP DIODE		
D7			B30-0838-05	LED		
D8			MTZ8.2JB	ZENER DIODE		
IC1			MC78L05M	IC(VOLTAGE REGULATOR/ +5V)		
IC2			M51943BML	IC(SYSTEM RESET)		
IC3 -7			XRA4558F	IC(OP AMP X2)OrBA4558F		
IC8			27C256QJESB	EPROM		
IC9			TC74HC573AF	IC(8 bit LATCH))		
IC10			XLJ93LC46	EEPROM		
IC11			UPD78310AGF	IC(MICROPROCESSOR)		
Q1 -7			DTC144EK	DIGITAL TRANSISTOR		
Q8			DTA114EK	DIGITAL TRANSISTOR		
Q9			2SC3326(A)	CHIP TRANSISTOR		
Q10			2SJ106(GR)	CHIP FET		
DISPLAY UNIT (X54-3070-XX) 12 : K,K2,M,M2,NM,NM2 14 : AM,AM2						
D1			B30-0855-05	LED(RED)		
D2			B30-0856-05	LED(GREEN)		
D3			B30-0855-05	LED(RED)		
D16			B30-0857-05	LED(YELLOW)		

L:Scandinavia K:USA P:Canada
Y:PX(Far East, Hawaii) T:England E:Europe
Y:AAFES(Europe) X:Australia M:Other Areas

TKR-720 : K,M,K2,M2
TKR-720N : M,M2
TKR-720A : M,M2

⚠ indicates safety critical components.

PARTS LIST

* New Parts
Parts without **Parts No.** are not supplied.
Les articles non mentionnés dans le **Parts No.** ne sont pas fournis.
Teile ohne **Parts No.** werden nicht geliefert.

DISPLAY UNIT (X54-3070-XX)

Ref. No. 参照番号	Address 位置	New Parts 新	Parts No. 部品番号	Description 部品名／規格	Destination 仕向	Remarks 備考
D17			B30-0856-05	LED(GREEN)		
D18			B30-0857-05	LED(YELLOW)		
D22 ,23			B38-0308-05	LED ASSY	AM AM2	
C1			CK73FB1H102K	CHIP C 1000PF K		
C2 ,3			CC73FCH1H330J	CHIP C 33PF J		
C4			CS15E1C010M	TANTAL 1.0UF 16WV		
C5			CK73FB1H103K	CHIP C 0.010UF K		
C6			CE04NW1E470M	ELECTRO 47UF 25WV		
C7 ,8			CK73FB1H103K	CHIP C 0.010UF K		
C9			CE04CW1E220M	ELECTRO 22UF 25WV		
C10			CE04CW1A101M	ELECTRO 100UF 10WV		
C11			CK73FB1H102K	CHIP C 1000PF K		
C12			CS15E1C010M	TANTAL 1.0UF 16WV		
C13			CK73FB1H103K	CHIP C 0.010UF K		
C14			CE04CW1E220M	ELECTRO 22UF 25WV		
C15 -20			CK73FB1H102K	CHIP C 1000PF K		
C21			CS15E1C100M	TANTAL 10UF 16WV		
C22			C92-0004-05	CHIP TAN 1.0UF 16WV		
C23			CK73FB1H102K	CHIP C 1000PF K		
C24			C92-0004-05	CHIP TAN 1.0UF 16WV		
C25			CK73FB1H182K	CHIP C 1800PF K		
C26 -28			CK73FB1H153K	CHIP C 0.015UF K		
C30			CK73FB1H153K	CHIP C 0.015UF K		
C31			CK73FB1H102K	CHIP C 1000PF K		
C32			C92-0004-05	CHIP TAN 1.0UF 16WV		
C33			CK73FB1H102K	CHIP C 1000PF K		
C34 ,35			CC73FCH1H101J	CHIP C 100PF J		
C36 -41			CK73FB1H102K	CHIP C 1000PF K		
C42			CK73FB1H472K	CHIP C 4700PF K		
C43 ,44			CK73FB1H102K	CHIP C 1000PF K		
C45 ,46			CK73FB1H102K	CHIP C 1000PF K	KK2MM2	
C45 ,46			CK73FB1H102K	CHIP C 1000PF K	NM NM2	
			E40-0218-05	SPACER (LED)		
CN1			E08-0874-05	RECTANGULAR RECEPTACLE(ROM)		
CN2			E40-3273-05	PIN CONNECTOR (15P)		
CN3			E40-3271-05	PIN CONNECTOR (13P)		
CN4			E08-0673-05	RECTANGULAR RECEPTACLE(MIC)		
CN5			E40-3270-05	PIN CONNECTOR (12P)		
CN6			E40-3260-05	PIN CONNECTOR (2P)		
CN7			E40-0274-05	PIN CONNECTOR (2P)		
CN8			E40-3273-05	PIN CONNECTOR (15P)		
CN9			E40-3247-05	PIN CONNECTOR (3P)	AM AM2	
CN10			E40-5191-05	PIN CONNECTOR (8P)	AM AM2	
CN11 ,12			E40-5079-05	PIN CONNECTOR (8P)	AM AM2	
CN13			E40-5191-05	PIN CONNECTOR (8P)	AM AM2	
JP2			E33-1854-00	WIRE		
JP3			E33-1917-05	WIRE		
JP4			E37-0310-05	WIRE (GREEN)	AM AM2	
W1			E31-3440-05	CONNECTING WIRE		
W2			E31-3441-05	CONNECTING WIRE	AM AM2	
F1			F06-2029-05	FUSE 2A		
X1			L77-1333-05	CRYSTAL RESONATOR (4.195MHZ)		

L:Scandinavia **K:**USA **P:**Canada
Y:PX(Far East, Hawaii) **T:**England **E:**Europe
Y:AAFES(Europe) **X:**Australia **M:**Other Areas

TKR-720 : K,M,K2,M2
TKR-720N : M,M2
TKR-720A : M,M2

⚠ indicates safety critical components.

PARTS LIST

⋇ New Parts
Parts without Parts No. are not supplied.
Les articles non mentionnes dans le Parts No. ne sont pas fournis.
Teile ohne Parts No. werden nicht geliefert.

DISPLAY UNIT (X54-3070-XX)

Ref. No. 参照番号	Address 位置	New Parts 新	Parts No. 部品番号	Description 部品名／規格	Destination 仕向	Remarks 備考
J4			R92-0670-05	CHIP R 0 ØHM		
J7			R92-0670-05	CHIP R 0 ØHM		
J9			R92-0670-05	CHIP R 0 ØHM		
J11 ,12			R92-0670-05	CHIP R 0 ØHM		
J14			R92-0670-05	CHIP R 0 ØHM		
R1			RK73FB2A331J	CHIP R 330 J 1/10W		
R3 ,4			RK73FB2A331J	CHIP R 330 J 1/10W		
R5 -8			RK73FB2A102J	CHIP R 1.0K J 1/10W		
R9			RK73FB2A153J	CHIP R 15K J 1/10W		
R10			RK73FB2A102J	CHIP R 1.0K J 1/10W		
R11			RK73FB2A220J	CHIP R 22 J 1/10W		
R12 -15			RK73FB2A223J	CHIP R 22K J 1/10W		
R16			RS14DB3A470J	FL-PRØØF RS 47 J 1W		
R17 -19			RK73FB2A102J	CHIP R 1.0K J 1/10W		
R20			RK73FB2A223J	CHIP R 22K J 1/10W		
R22			RK73FB2A473J	CHIP R 47K J 1/10W		
R24 -28			RK73FB2A102J	CHIP R 1.0K J 1/10W		
R30 ,31			RK73FB2A473J	CHIP R 47K J 1/10W		
R32			RK73FB2A101J	CHIP R 100 J 1/10W		
R33			RK73FB2A562J	CHIP R 5.6K J 1/10W		
R34			RK73FB2A681J	CHIP R 680 J 1/10W		
R35			R92-0341-05	FIXED RESISTØR 4.7 J 1/4W		
R38 ,39			RK73FB2A331J	CHIP R 330 J 1/10W		
R40 ,41			RK73FB2A102J	CHIP R 1.0K J 1/10W		
R42			RK73FB2A681J	CHIP R 680 J 1/10W		
R43 ,44			RK73FB2A102J	CHIP R 1.0K J 1/10W		
R45			RK73FB2A473J	CHIP R 47K J 1/10W		
R46			RK73FB2A101J	CHIP R 100 J 1/10W		
R47			RK73FB2A103J	CHIP R 10K J 1/10W		
R48 ,49			RK73FB2A224J	CHIP R 220K J 1/10W		
R50			RK73FB2A394J	CHIP R 390K J 1/10W		
R51			RK73FB2A153J	CHIP R 15K J 1/10W		
R52			RK73FB2A303J	CHIP R 30K J 1/10W		
R53			RK73FB2A224J	CHIP R 220K J 1/10W		
R54			RK73FB2A622J	CHIP R 6.2K J 1/10W		
R55 ,56			RK73FB2A223J	CHIP R 22K J 1/10W		
R57			RK73FB2A183J	CHIP R 18K J 1/10W		
R58			RK73FB2A681J	CHIP R 680 J 1/10W		
R59			RK73FB2A103J	CHIP R 10K J 1/10W		
R61			RS14DB3A1RØJ	FL-PRØØF RS 1.0 J 1W		
R62 ,63			RK73FB2A223J	CHIP R 22K J 1/10W		
R64			RK73FB2A331J	CHIP R 330 J 1/10W		
R65			RK73FB2A102J	CHIP R 1.0K J 1/10W		
R66			RK73FB2A223J	CHIP R 22K J 1/10W		
R67			RK73FB2A102J	CHIP R 1.0K J 1/10W		
R68			RK73FB2A223J	CHIP R 22K J 1/10W		
R69			RK73FB2A102J	CHIP R 1.0K J 1/10W		
R70			RK73FB2A223J	CHIP R 22K J 1/10W		
R71			RK73FB2A102J	CHIP R 1.0K J 1/10W		
R72			RK73FB2A223J	CHIP R 22K J 1/10W		
R73 ,74			RK73FB2A103J	CHIP R 10K J 1/10W		
R75 ,76			RK73FB2A104J	CHIP R 100K J 1/10W		
R77 -90			RK73FB2A331J	CHIP R 330 J 1/10W	AM AM2	
R92 -94			RK73FB2A473J	CHIP R 47K J 1/10W		
R95			RK73FB2A271J	CHIP R 270 J 1/10W		

L:Scandinavia K:USA P:Canada
Y:PX(Far East, Hawaii) T:England E:Europe
Y:AAFES(Europe) X:Australia M:Other Areas

TKR-720 : K,M,K2,M2
TKR-720N : M,M2
TKR-720A : M,M2

⚠ indicates safety critical components.

PARTS LIST

* New Parts
Parts without Parts No. are not supplied.
Les articles non mentionnes dans le Parts No. ne sont pas fournis.
Teile ohne Parts No. werden nicht geliefert.

DISPLAY UNIT (X54-3070-XX)
TX-RX UNIT (X57-3760-XX)

Ref. No. 参照番号	Address 位置	New Parts 新	Parts No. 部品番号	Description 部品名／規格	Destination 仕向	Remarks 備考
R96 ,97			R92-0670-05	CHIP R 0 OHM		
R99 ,100			R92-0670-05	CHIP R 0 OHM		
VR1			R01-4418-05	POTENTIOMETER(50K)SQL		
VR2			R01-3434-05	POTENTIOMETER(10K)VOL		
S1			W02-0393-05	ENCODER	AM AM2	
S2 -4			S40-2455-05	PUSH SWITCH		
D4 -6			1SS184	CHIP DIODE		
D7 ,8			1SS181	CHIP DIODE		
D10 ,11			1SS181	CHIP DIODE		
D13			1SS181	CHIP DIODE		
D19			1SS272	CHIP DIODE		
D21			1SS272	CHIP DIODE	KK2MM2	
D21			1SS272	CHIP DIODE	NM NM2	
D24			1SS133	DIODE		
IC1			751D4G-604-1B	IC(MICROPROCESSOR)		
IC2			XLJ93LC46	IC(1K EEPROM)		
IC3			M51943BML	IC(SYSTEM RESET)		
IC4			AN78N05	IC(VOLTAGE REGULATOR/ +5V)		
IC5 ,6			UPC4558C	IC(OP AMP X2)		
Q1 ,2			DTC114EK	DIGITAL TRANSISTOR		
Q3			2SA1162(Y)	CHIP TRANSISTOR		
Q6			2SC3326(A)	CHIP TRANSISTOR		
Q7 ,8			DTC114EK	DIGITAL TRANSISTOR		
TX-RX UNIT (X57-3760-XX) 10 : K,M,AM 11 : K2,M2,AM2 12 : NM 13: NM2						
C1			CE04EW1A101M	ELECTRO 100UF 10WV		
C2 -4			CK73FB1H471K	CHIP C 470PF K		
C5 -7			CC73FCH1H101J	CHIP C 100PF J		
C8			CK73EB1H473K	CHIP C 0.047UF K		
C9			C92-0004-05	CHIP TAN 1.0UF 16WV		
C10			C92-0001-05	CHIP TAN 0.1UF 35WV		
C11			CE04EW1A101M	ELECTRO 100UF 10WV		
C12			CK73FB1H471K	CHIP C 470PF K		
C13			CE04EW1A101M	ELECTRO 100UF 10WV		
C14			CK73FB1H471K	CHIP C 470PF K		
C15			CE04EW1A101M	ELECTRO 100UF 10WV		
C16 ,17			CK73FB1H471K	CHIP C 470PF K		
C18 -20			CC73FCH1H101J	CHIP C 100PF J		
C21			CK73EB1H473K	CHIP C 0.047UF K		
C22			C92-0004-05	CHIP TAN 1.0UF 16WV		
C23			C92-0001-05	CHIP TAN 0.1UF 35WV		
C24			CK73FB1H103K	CHIP C 0.010UF K		
C26			CK73FB1H103K	CHIP C 0.010UF K		
C27			CE04EW1A101M	ELECTRO 100UF 10WV		
C28 -34			CK73FB1H471K	CHIP C 470PF K		
C35			CE04EW1A101M	ELECTRO 100UF 10WV		
C36			CK73FB1H223K	CHIP C 0.022UF K		
C37			CC73FCH1H101J	CHIP C 100PF J		
C38			CE04EW1A101M	ELECTRO 100UF 10WV		
C39			CE04EW1A470M	ELECTRO 47UF 10WV		
C44			CE04EW1A470M	ELECTRO 47UF 10WV		
C57 ,58			CC73FCH1H101J	CHIP C 100PF J		
C59			CC73FCH1H331J	CHIP C 330PF J		
C60 -63			CK73FB1H103K	CHIP C 0.010UF K		

L:Scandinavia **K:**USA **P:**Canada
Y:PX(Far East, Hawaii) **T:**England **E:**Europe
Y:AAFES(Europe) **X:**Australia **M:**Other Areas

TKR-720 : K,M,K2,M2
TKR-720N : M,M2
TKR-720A : M,M2

⚠ indicates safety critical components.

PARTS LIST

× New Parts
Parts without Parts No. are not supplied.
Les articles non mentionnes dans le Parts No. ne sont pas fournis.
Teile ohne Parts No. werden nicht geliefert.

TX-RX UNIT (X57-3760-XX)

Ref. No. 参照番号	Address 位置	New Parts 新	Parts No. 部品番号	Description 部品名／規格			Destination 仕向	Remarks 備考
C64			CE04EW1E100M	ELECTRO	10UF	25WV		
C65			CK73FB1H103K	CHIP C	0.010UF	K		
C66			C90-2041-05	ELECTRO	10UF	10WV		
C67			C92-0007-05	CHIP TAN	2.2UF	20WV		
C68 ,69			CS15E0J100M	TANTAL	10UF	6.3WV		
C70			CS15E1C100M	TANTAL	10UF	16WV		
C71			CE04EW1A101M	ELECTRO	100UF	10WV		
C72			CE04EW1A221M	ELECTRO	220UF	10WV		
C73			CK73FB1H103K	CHIP C	0.010UF	K		
C74			CS15E1C010M	TANTAL	1.0UF	16WV		
C75			CK73FB1H103K	CHIP C	0.010UF	K		
C76			CS15E1C010M	TANTAL	1.0UF	16WV		
C77			CK73FB1H471K	CHIP C	470PF	K		
C78 ,79			CE04EW1A470M	ELECTRO	47UF	10WV		
C80			CE04EW1C100M	ELECTRO	10UF	16WV		
C81			CK73FB1H103K	CHIP C	0.010UF	K		
C82			CE04EW1A470M	ELECTRO	47UF	10WV		
C83			CE04EW1E471M	ELECTRO	470UF	25WV		
C84			C90-2030-05	ELECTRO	1000UF	10WV		
C85			CK73EB1H104K	CHIP C	0.10UF	K		
C86			C92-0004-05	CHIP TAN	1.0UF	16WV		
C87			CE04EW1A470M	ELECTRO	47UF	10WV		
C88			CK73FB1H103K	CHIP C	0.010UF	K		
C89			CE04EW1A470M	ELECTRO	47UF	10WV		
C90			CK73FB1H103K	CHIP C	0.010UF	K		
C91			CE04EW1C100M	ELECTRO	10UF	16WV		
C92			CE04EW1A470M	ELECTRO	47UF	10WV		
C93 -95			CK73FB1H103K	CHIP C	0.010UF	K		
C96 -101			CK73FB1H471K	CHIP C	470PF	K		
C102			CC73FRH1H080D	CHIP C	8PF	D	KMAMNM	
C102			CC73FRH1H100D	CHIP C	10PF	D	K2M2	
C102			CC73FRH1H100D	CHIP C	10PF	D	AM2NM2	
C103			CC73FRH1H390J	CHIP C	39PF	J	KMAMNM	
C103			CC73FRH1H560J	CHIP C	56PF	J	K2M2	
C103			CC73FRH1H560J	CHIP C	56PF	J	AM2NM2	
C104			CC73FCH1H020C	CHIP C	2.0PF	C	KMAMNM	
C104			CC73FCH1H1R5C	CHIP C	1.5PF	C	K2M2	
C104			CC73FCH1H1R5C	CHIP C	1.5PF	C	AM2NM2	
C105			CC73FCH1H0R5C	CHIP C	0.5PF	C		
C106			CC73FRH1H080D	CHIP C	8PF	D	KMAMNM	
C106			CC73FRH1H090D	CHIP C	9PF	D	K2M2	
C106			CC73FRH1H090D	CHIP C	9PF	D	AM2NM2	
C107			CC73FRH1H560J	CHIP C	56PF	J	KMAMNM	
C107			CC73FRH1H750J	CHIP C	75PF	J	K2M2	
C107			CC73FRH1H750J	CHIP C	75PF	J	AM2NM2	
C108			CK73FB1H102K	CHIP C	1000PF	K		
C109			CC73FRH1H430J	CHIP C	43PF	J	KMAMNM	
C109			CC73FRH1H820J	CHIP C	82PF	J	K2M2	
C109			CC73FRH1H820J	CHIP C	82PF	J	AM2NM2	
C110			CC73FCH1H020C	CHIP C	2.0PF	C	KMAMNM	
C110			CC73FCH1H1R5C	CHIP C	1.5PF	C	K2M2	
C110			CC73FCH1H1R5C	CHIP C	1.5PF	C	AM2NM2	
C111			CC73FCH1H0R5C	CHIP C	0.5PF	C		
C112			CC73FRH1H070D	CHIP C	7PF	D	KMAMNM	
C112			CC73FRH1H090D	CHIP C	9PF	D	K2M2	

L:Scandinavia K:USA P:Canada
Y:PX(Far East, Hawaii) T:England E:Europe
Y:AAFES(Europe) X:Australia M:Other Areas

TKR-720 : K,M,K2,M2
TKR-720N : M,M2
TKR-720A : M,M2

⚠ indicates safety critical components.

PARTS LIST

* New Parts
Parts without Parts No. are not supplied.
Les articles non montionnes dans le Parts No. ne sont pas fournis.
Teile ohne Parts No. werden nicht geliefert.

TX-RX UNIT (X57-3760-XX)

Ref. No. 参照番号	Address 位置	New Parts 新	Parts No. 部品番号	Description 部品名／規格	Destination 仕向	Remarks 備考
C112			CC73FRH1H090D	CHIP C 9PF D	AM2NM2	
C113			CC73FCH1H020C	CHIP C 2.0PF C	KMAMNM	
C113			CC73FCH1H1R5C	CHIP C 1.5PF C	K2M2	
C113			CC73FCH1H1R5C	CHIP C 1.5PF C	AM2NM2	
C114			CC73FCH1H010C	CHIP C 1PF C		
C115			CC73FRH1H090D	CHIP C 9PF D	KMAMNM	
C115			CC73FRH1H100D	CHIP C 10PF D	K2M2	
C115			CC73FRH1H100D	CHIP C 10PF D	AM2NM2	
C116			CC73FRH1H220J	CHIP C 22PF J	KMAMNM	
C116			CC73FRH1H330J	CHIP C 33PF J	K2M2	
C116			CC73FRH1H330J	CHIP C 33PF J	AM2NM2	
CN1			E04-0171-05	RF COAXIAL CABLE RECEPTACLE		
CN5			E40-3091-05	PIN CONNECTOR(3P)		
CN6			E40-5069-05	PIN CONNECTOR(12P)		
CN7			E40-3092-05	PIN CONNECTOR(4P)		
CN8			E40-0573-05	PIN CONNECTOR(5P)		
CN9 ,10			E04-0154-05	RF COAXIAL CABLE RECEPTACLE		
TP1 -3			E23-0464-05	TERMINAL		
W1			E33-1859-00	FINISHED WIRE SET		
A1			F10-1366-04	SHIELDING PLATE		
A2 -6			F11-0844-05	SHIELDING COVER		
			G02-0598-04	LEAF SPRING		
U	3C		N87-2608-46	BRAZIER HEAD TAPTTE SCREW		
CF1			L72-0339-05	CERAMIC FILTER(CFV455D)	KMAMK2	
CF1			L72-0339-05	CERAMIC FILTER(CFV455D)	M2 AM2	
CF1			L72-0360-05	CERAMIC FILTER(CFV455G)	NM NM2	
L1			L40-2211-81	SMALL FIXED INDUCTOR(220UH)		
L2			L40-1021-13	SMALL FIXED INDUCTOR(1MH)		
L3 ,4			L40-2211-81	SMALL FIXED INDUCTOR(220UH)		
L5			L40-1021-13	SMALL FIXED INDUCTOR(1MH)		
L6			L40-2211-81	SMALL FIXED INDUCTOR(220UH)		
L11 ,12			L39-0451-05	COIL		
L13			L40-4782-14	SMALL FIXED INDUCTOR(0.47UH)		
L14			L40-5682-14	SMALL FIXED INDUCTOR(0.56UH)		
L15			L40-2201-14	SMALL FIXED INDUCTOR(22UH)		
L16 ,17			L34-2160-05	IFT(21.4MHz)		
L18			L30-0503-05	IFT(455KHz)		
L19			L15-0016-05	LOW-FREQUENCY CHOKE COIL		
L20 ,21			L34-4059-05	COIL		
L22 ,23			L40-4791-14	SMALL FIXED INDUCTOR(4.7UH)		
L24 -26			L34-4059-05	COIL		
L27			L33-0649-05	CHOKE COIL		
X1			L77-1348-05	CRYSTAL RESONATOR(20.945MHz)		
XF1			L71-0274-05	MCF(21F15C)	KMAMK2	
XF1			L71-0274-05	MCF(21F15C)	M2 AM2	
XF1			L71-0417-05	MCF(21F7.5C)	NM NM2	
Z3			L77-1338-05	TCXO(12.8MHz)		
Z6			L77-1488-05	VCXO(12.8MHz) OrL77-1388-05		
R1			RK73FB2A332J	CHIP R 3.3K J 1/10W		
R2			RK73FB2A122J	CHIP R 1.2K J 1/10W		
R3 ,4			RK73FB2A102J	CHIP R 1.0K J 1/10W		
R5 ,6			RK73FB2A472J	CHIP R 4.7K J 1/10W		

L:Scandinavia K:USA P:Canada
Y:PX(Far East, Hawaii) T:England E:Europe
Y:AAFES(Europe) X:Australia M:Other Areas

TKR-720 : K,M,K2,M2
TKR-720N : M,M2
TKR-720A : M,M2

⚠ indicates safety critical components.

PARTS LIST

× New Parts
Parts without Parts No. are not supplied.
Les articles non mentionnes dans le Parts No. ne sont pas fournis.
Teile ohne Parts No. werden nicht geliefert.

TX-RX UNIT (X57-3760-XX)

Ref. No. 参照番号	Address 位置	New Parts 新	Parts No. 部品番号	Description 部品名／規格	Destination 仕向	Remarks 備考
R7			RK73FB2A221J	CHIP R 220 J 1/10W		
R8			RK73FB2A271J	CHIP R 270 J 1/10W		
R9			RK73FB2A180J	CHIP R 18 J 1/10W		
R10			RK73FB2A271J	CHIP R 270 J 1/10W		
R11			RK73FB2A332J	CHIP R 3.3K J 1/10W		
R12			RK73FB2A122J	CHIP R 1.2K J 1/10W		
R13 ,14			RK73FB2A102J	CHIP R 1.0K J 1/10W		
R15 ,16			RK73FB2A472J	CHIP R 4.7K J 1/10W		
R17			RK73FB2A221J	CHIP R 220 J 1/10W		
R18			RK73FB2A681J	CHIP R 680 J 1/10W		
R19 ,20			RK73FB2A821J	CHIP R 820 J 1/10W		
R21			RK73FB2A101J	CHIP R 100 J 1/10W		
R22			RK73FB2A103J	CHIP R 10K J 1/10W		
R23			RK73FB2A123J	CHIP R 12K J 1/10W		
R24			RK73FB2A821J	CHIP R 820 J 1/10W		
R25			RK73FB2A473J	CHIP R 47K J 1/10W		
R26			RK73FB2A563J	CHIP R 56K J 1/10W		
R27			RK73FB2A103J	CHIP R 10K J 1/10W		
R34			RK73FB2A330J	CHIP R 33 J 1/10W		
R35			RK73FB2A182J	CHIP R 1.8K J 1/10W	KMAMK2	
R35			RK73FB2A182J	CHIP R 1.8K J 1/10W	M2 AM2	
R35			RK73FB2A122J	CHIP R 1.2K J 1/10W	NM NM2	
R36			RK73FB2A100J	CHIP R 10 J 1/10W		
R37			RK73FB2A152J	CHIP R 1.5K J 1/10W		
R38			RK73FB2A681J	CHIP R 680 J 1/10W		
R39			RK73FB2A560J	CHIP R 56 J 1/10W		
R41			RK73FB2A333J	CHIP R 33K J 1/10W	KMAMK2	
R41			RK73FB2A333J	CHIP R 33K J 1/10W	M2 AM2	
R41			R92-0670-05	CHIP R 0 OHM	NM NM2	
R42			RK73FB2A682J	CHIP R 6.8K J 1/10W		
R43			RK73FB2A683J	CHIP R 68K J 1/10W		
R44			RK73FB2A222J	CHIP R 2.2K J 1/10W		
R45			RK73FB2A221J	CHIP R 220 J 1/10W		
R46			RK73FB2A392J	CHIP R 3.9K J 1/10W		
R47			RK73FB2A222J	CHIP R 2.2K J 1/10W		
R48			RK73FB2A103J	CHIP R 10K J 1/10W		
R49			RK73FB2A182J	CHIP R 1.8K J 1/10W		
R50			RK73FB2A222J	CHIP R 2.2K J 1/10W		
R51 -54			RK73FB2A223J	CHIP R 22K J 1/10W		
R55			RK73FB2A221J	CHIP R 220 J 1/10W		
R56			RK73FB2A123J	CHIP R 12K J 1/10W		
R57			RK73FB2A2R2J	CHIP R 2.2 J 1/10W		
R58 ,59			RK73FB2A223J	CHIP R 22K J 1/10W		
R60			RK73FB2A102J	CHIP R 1.0K J 1/10W		
R61			RK73FB2A104J	CHIP R 100K J 1/10W		
R62			RK73FB2A222J	CHIP R 2.2K J 1/10W		
R63			R92-0670-05	CHIP R 0 OHM		
R64 ,65			RK73FB2A223J	CHIP R 22K J 1/10W		
R66 ,67			RK73FB2A471J	CHIP R 470 J 1/10W		
R68 ,69			RK73FB2A103J	CHIP R 10K J 1/10W		
R70 ,71			RK73FB2A473J	CHIP R 47K J 1/10W		
R72			RK73FB2A681J	CHIP R 680 J 1/10W		
R73			RK73FB2A101J	CHIP R 100 J 1/10W		
R74			RK73FB2A562J	CHIP R 5.6K J 1/10W		
R75			RK73FB2A223J	CHIP R 22K J 1/10W		

L:Scandinavia K:USA P:Canada
Y:PX(Far East, Hawaii) T:England E:Europe
Y:AAFES(Europe) X:Australia M:Other Areas

TKR-720 : K,M,K2,M2
TKR-720N : M,M2
TKR-720A : M,M2

⚠ indicates safety critical components.

PARTS LIST

* New Parts
Parts without **Parts No.** are not supplied.
Les articles non mentionnes dans le **Parts No.** ne sont pas fournis.
Teile ohne **Parts No.** werden nicht geliefert.

TX-RX UNIT (X57-3760-XX)
RX PLL : Z1,TX PLL : Z4 (X58-3140-XX)

Ref. No. 参照番号	Address 位置	New Parts 新	Parts No. 部品番号	Description 部品名／規格	Destination 仕向	Remarks 備考
R76			RK73FB2A332J	CHIP R 3.3K J 1/10W		
R78			RK73FB2A330J	CHIP R 33 J 1/10W		
R79			RK73FB2A102J	CHIP R 1.0K J 1/10W		
VR1			R12-0420-05	TRIMMING POT.(500)		
VR2 ,3			R12-4408-05	TRIMMING POT.(50K)		
K1			S51-1435-05	RELAY		
D1 ,2			1SV172	DIODE		
D4			ND487C1T	DBM		
D5 -11			1SS184	DIODE		
D12			1SS226	DIODE		
IC1			UPC1242H	IC(AF POWER AMP)		
IC2			MB3756	IC(REGULATOR/OUTPUT.SEL)		
IC3			NJM4558D	IC(OP AMP X2)		
IC4			L78N08	IC(REGULATOR/8V)		
Q1 ,2			2SC2712(Y)	TRANSISTOR		
Q4 ,5			2SK125	FET		
Q6			2SK302(GR)	FET		
Q7			2SC2712(Y)	TRANSISTOR		
Q8			DTC114EK	DIGITAL TRANSISTOR		
Q9 ,10			2SC3326(A)	TRANSISTOR		
Q11 -13			DTC114EK	DIGITAL TRANSISTOR		
Q14 ,15			2SK125	FET		
TH1			112-203-2	THERMISTOR(20K)		
TH2			112-101-2	THERMISTOR(100)		
Z1			X58-3140-10	SUB UNIT(RX PLL)	KMAMK2	
Z1			X58-3140-10	SUB UNIT(RX PLL)	M2 AM2	
Z1			X58-3140-51	SUB UNIT(RX PLL)	NM NM2	
Z2			X58-3290-10	SUB UNIT(RX VCO)	KMAMNM	
Z2			X58-3290-11	SUB UNIT(RX VCO)	K2M2	
Z2			X58-3290-11	SUB UNIT(RX VCO)	AM2NM2	
Z4			X58-3140-10	SUB UNIT(TX PLL)	KMAMK2	
Z4			X58-3140-10	SUB UNIT(TX PLL)	M2 AM2	
Z4			X58-3140-51	SUB UNIT(TX PLL)	NM NM2	
Z5			X58-3790-10	SUB UNIT(TX VCO)	KMAMNM	
Z5			X58-3790-11	SUB UNIT(TX VCO)	K2M2	
Z5			X58-3790-11	SUB UNIT(TX VCO)	AM2NM2	
Z7			X59-3210-10	MODULE UNIT(MIC AMP)		
Z8			X59-3220-10	MODULE UNIT(IF)		
Z9			X59-3230-10	MODULE UNIT(BPF/VCA)		
RX PLL : Z1,TX PLL : Z4 (X58-3140-XX) 10 : K,K2,M,M2,AM,AM2 51 : NM,NM2						
C1 -7			CK73FB1H102K	CHIP C 1000PF K		
C8			CC73FCH1H080D	CHIP C 8.0PF D		
C9			CK73FB1H102K	CHIP C 1000PF K		
C10			C92-0009-05	CHIP TAN 4.7UF 10WV		
C11 ,12			CC73FCH1H070D	CHIP C 7.0PF D		
C13 ,14			CK73FB1H102K	CHIP C 1000PF K		
-			E23-0471-05	TERMINAL		
A1			F11-1092-04	SHIELDING COVER		
L1			L40-2281-80	SMALL FIXED INDUCTOR(220NH)		
R1			RK73FB2A472J	CHIP R 4.7K J 1/10W		
R2			RK73FB2A102J	CHIP R 1.0K J 1/10W		

L:Scandinavia **K:**USA **P:**Canada
Y:PX(Far East, Hawaii) **T:**England **E:**Europe
Y:AAFES(Europe) **X:**Australia **M:**Other Areas

TKR-720 : K,M,K2,M2
TKR-720N : M,M2
TKR-720A : M,M2

⚠ indicates safety critical components.

PARTS LIST

* New Parts
Parts without Parts No. are not supplied.
Les articles non mentionnes dans le Parts No. ne sont pas fournis.
Teile ohne Parts No. werden nicht geliefert.

RX PLL : Z1,TX PLL : Z4 (X58-3140-XX)
RX VCO : Z2 (X58-3290-XX)

Ref. No. 参照番号	Address 位置	New Parts 新	Parts No. 部品番号	Description 部品名／規格	Destination 仕向	Remarks 備考
R3 ,4			RK73FB2A270J	CHIP R 27 J 1/10W		
R5			RK73FB2A182J	CHIP R 1.8K J 1/10W		
R6 -9			RK73FB2A103J	CHIP R 10K J 1/10W		
R10			R92-0670-05	CHIP R 0 OHM		
R11			RK73FB2A103J	CHIP R 10K J 1/10W		
R12			RK73FB2A471J	CHIP R 470 J 1/10W		
R13			R92-0670-05	CHIP R 0 OHM		
R14			RK73FB2A472J	CHIP R 4.7K J 1/10W		
R15			RK73FB2A562J	CHIP R 5.6K J 1/10W		
D1			RD3.0M(B2)	CHIP ZENER DIODE(3.0V)		
IC1			MB504F	IC(MODULUS PRE SCALER)		
IC2			JLC1075F	IC(PLL FREQ SYNTHESIZER)		
Q1			2SC2714(Y)	CHIP TRANSISTOR		
Q2 -5			DTC114EK	DIGITAL TRANSISTOR		
RX VCO : Z2 (X58-3290-XX) 10 : K,M,AM,NM 11 : K2,M2,AM2,NM2						
C1			CK73FB1H102K	CHIP C 1000PF K		
C2			CC73FCH1H220J	CHIP C 22PF J	K2M2	
C2			CC73FCH1H220J	CHIP C 22PF J	AM2NM2	
C2			CC73FCH1H270J	CHIP C 27PF J	KMAMNM	
C3			CC73FCH1H121J	CHIP C 120PF J		
C4			CC73FCH1H150J	CHIP C 15PF J	KMAMNM	
C4			CC73FCH1H180J	CHIP C 18PF J	K2M2	
C4			CC73FCH1H180J	CHIP C 18PF J	AM2NM2	
C5			CC73FCH1H060D	CHIP C 6PF D	KMAMNM	
C5			CC73FCH1H090D	CHIP C 9PF D	K2M2	
C5			CC73FCH1H090D	CHIP C 9PF D	AM2NM2	
C6			CC73FCH1H100D	CHIP C 10PF D	KMAMNM	
C6			CC73FCH1H150J	CHIP C 15PF J	K2M2	
C6			CC73FCH1H150J	CHIP C 15PF J	AM2NM2	
C7			CK73FB1H102K	CHIP C 1000PF K		
C8			CC73FCH1H030C	CHIP C 3PF C		
C9			CK73FB1H102K	CHIP C 1000PF K		
C10			CC73FCH1H150J	CHIP C 15PF J		
C11			CC73FCH1H010C	CHIP C 1PF C	KMAMNM	
C11			CC73FCH1H030C	CHIP C 3PF C	K2M2	
C11			CC73FCH1H030C	CHIP C 3PF C	AM2NM2	
C12			CC73FCH1H080D	CHIP C 8PF D		
C13			CC73FCH1H050C	CHIP C 5PF C		
C14 -17			CK73FB1H102K	CHIP C 1000PF K		
C18			CE04CW1A101M	ELECTRO 100UF 10WV		
C19			CC73FCH1H180J	CHIP C 18PF J		
C20			CC73FCH1H070D	CHIP C 7PF D		
C21			CC73FCH1H180J	CHIP C 18PF J		
C22			CK73FB1H102K	CHIP C 1000PF K		
TC1			C05-0363-05	TRIMMING CAP (18P)		
A1			F11-1060-04	SHIELDING COVER		
-			E23-0603-05	TERMINAL		
L1			L40-1092-81	CHIP INDUCTOR (1UH)		
L2			L34-2309-05	OSCILLATING COIL	KMAMNM	
L2			L32-0658-05	OSCILLATING COIL	K2M2	
L2			L32-0658-05	OSCILLATING COIL	AM2NM2	
L3 ,4			L40-1092-81	CHIP INDUCTOR (1UH)		
L5			L40-1881-80	CHIP INDUCTOR (180NH)		

L:Scandinavia **K:**USA **P:**Canada
Y:PX(Far East, Hawaii) **T:**England **E:**Europe
Y:AAFES(Europe) **X:**Australia **M:**Other Areas

TKR-720 : K,M,K2,M2
TKR-720N : M,M2
TKR-720A : M,M2

⚠ indicates safety critical components.

PARTS LIST

⁎ New Parts
Parts without Parts No. are not supplied.
Les articles non mentionnes dans le Parts No. ne sont pas fournis.
Teile ohne Parts No. werden nicht geliefert.

RX VCO : Z2 (X58-3290-XX)
TX VCO : Z5 (X58-3790-XX)

Ref. No. 参照番号	Address 位置	New Parts 新	Parts No. 部品番号	Description 部品名／規格	Destination 仕向	Remarks 備考
L6			L40-4772-80	CHIP INDUCTOR (47NH)		
R1			RK73FB2A221J	CHIP R 220 J 1/10W		
R2			RK73FB2A104J	CHIP R 100K J 1/10W		
R3 ,4			RK73FB2A331J	CHIP R 330 J 1/10W		
R5			RK73FB2A101J	CHIP R 100 J 1/10W		
R6			RK73FB2A153J	CHIP R 15K J 1/10W		
R7			RK73FB2A562J	CHIP R 5.6K J 1/10W		
R8			RK73FB2A331J	CHIP R 330 J 1/10W		
R9			RK73FB2A101J	CHIP R 100 J 1/10W		
R10			RK73FB2A183J	CHIP R 18K J 1/10W		
R11			RK73FB2A272J	CHIP R 2.7K J 1/10W		
R12			RK73FB2A392J	CHIP R 3.9K J 1/10W		
R13			RK73FB2A562J	CHIP R 5.6K J 1/10W		
R14			RK73FB2A121J	CHIP R 120 J 1/10W		
R15			RK73FB2A560J	CHIP R 56 J 1/10W		
R16			RK73FB2A101J	CHIP R 100 J 1/10W		
D1			1SV166	VARI-CAP DIODE		
Q1			2SK125	FET		
Q2			2SC2714(Y)	CHIP TRANSISTOR		
Q3 ,4			2SC3356	CHIP TRANSISTOR		
TX VCO : Z5 (X58-3790-XX) 10 : K,M,AM,NM 11 : K2,M2,AM2,NM2						
C1			CK73FB1H102K	CHIP C 1000PF K		
C2			CC73FCH1H150J	CHIP C 15PF J	K2M2	
C2			CC73FCH1H150J	CHIP C 15PF J	AM2NM2	
C2			CC73FCH1H180J	CHIP C 18PF J	KMAMNM	
C3			CC73FCH1H470J	CHIP C 47PF J	K2M2	
C3			CC73FCH1H470J	CHIP C 47PF J	AM2NM2	
C3			CC73FCH1H560J	CHIP C 56PF J	KMAMNM	
C4			CC73FCH1H090D	CHIP C 9PF D	KMAMNM	
C4			CC73FCH1H120J	CHIP C 12PF J	K2M2	
C4			CC73FCH1H120J	CHIP C 12PF J	AM2NM2	
C5			CC73FCH1H040C	CHIP C 4PF C	KMAMNM	
C5			CC73FCH1H060D	CHIP C 6PF D	K2M2	
C5			CC73FCH1H060D	CHIP C 6PF D	AM2NM2	
C6			CC73FCH1H060D	CHIP C 6PF D	KMAMNM	
C6			CC73FCH1H100D	CHIP C 10PF D	K2M2	
C6			CC73FCH1H100D	CHIP C 10PF D	AM2NM2	
C7			CK73FB1H102K	CHIP C 1000PF K		
C8			CC73FCH1H030C	CHIP C 3PF C		
C9			CK73FB1H102K	CHIP C 1000PF K		
C10			CC73FCH1H150J	CHIP C 15PF J		
C11			CC73FCH1H010C	CHIP C 1PF C	KMAMNM	
C11			CC73FCH1H030C	CHIP C 3PF C	K2M2	
C11			CC73FCH1H030C	CHIP C 3PF C	AM2NM2	
C12			CC73FCH1H080D	CHIP C 8PF D		
C13			CC73FCH1H050C	CHIP C 5PF C		
C14 -17			CK73FB1H102K	CHIP C 1000PF K		
C18			CE04CW1A101M	ELECTRO 100UF 10WV		
C19			CK73FB1H102K	CHIP C 1000PF K		
C20			CC73FCH1H010C	CHIP C 1PF C		
C21			CK73FB1H103K	CHIP C 0.010UF K		
C22			CK73FB1H102K	CHIP C 1000PF K		
TC1			C05-0353-05	TRIMMING CAP (10PF)		

L:Scandinavia K:USA P:Canada
Y:PX(Far East, Hawaii) T:England E:Europe
Y:AAFES(Europe) X:Australia M:Other Areas

TKR-720 : K,M,K2,M2
TKR-720N : M,M2
TKR-720A : M,M2

⚠ indicates safety critical components.

PARTS LIST

* New Parts
Parts without Parts No. are not supplied.
Les articles non mentionnes dans le Parts No. ne sont pas fournis.
Teile ohne Parts No. werden nicht geliefert.

TX VCO : Z5 (X58-3790-XX)
MIC AMP : Z7 (X59-3210-10)

Ref. No. 参照番号	Address 位置	New Parts 新	Parts No. 部品番号	Description 部品名／規格	Destination 仕向	Remarks 備考
			E23-0603-05	TERMINAL		
A1			F11-1060-04	SHIELD CASE		
L1			L40-1092-81	CHIP INDUCTOR (1UH)		
L2			L34-2309-05	COIL(4T)	KMAMNM	
L2			L32-0658-05	COIL(4T)	K2M2	
L2			L32-0658-05	COIL(4T)	AM2NM2	
L3			L40-1092-81	CHIP INDUCTOR (1UH)		
L4			L40-1092-81	CHIP INDUCTOR (1UH)		
L5			L40-1881-80	CHIP INDUCTOR (180NH)		
L6			L40-1092-81	CHIP INDUCTOR (1UH)		
R1			RK73FB2A221J	CHIP R 220 J 1/10W		
R2			RK73FB2A104J	CHIP R 100K J 1/10W		
R3			RK73FB2A101J	CHIP R 100 J 1/10W		
R4			RK73FB2A331J	CHIP R 330 J 1/10W		
R5			RK73FB2A101J	CHIP R 100 J 1/10W		
R6			RK73FB2A153J	CHIP R 15K J 1/10W		
R7			RK73FB2A562J	CHIP R 5.6K J 1/10W		
R8			RK73FB2A331J	CHIP R 330 J 1/10W		
R9			RK73FB2A101J	CHIP R 100 J 1/10W		
R10			RK73FB2A183J	CHIP R 18K J 1/10W		
R11			RK73FB2A272J	CHIP R 2.7K J 1/10W		
R12			RK73FB2A392J	CHIP R 3.9K J 1/10W		
R13			RK73FB2A562J	CHIP R 5.6K J 1/10W		
R14			RK73FB2A121J	CHIP R 120 J 1/10W		
R15			RK73FB2A560J	CHIP R 56 J 1/10W		
R16			RK73FB2A101J	CHIP R 100 J 1/10W		
R17			R92-0687-05	CHIP R 0 OHM		
R18 ,19			RK73FB2A104J	CHIP R 100K J 1/10W		
R20			RK73FB2A101J	CHIP R 100 J 1/10W		
D1			1SV166	VARI-CAP DIODE		
D2			1SV164	VARI-CAP DIODE		
Q1			2SK125	FET		
Q2			2SC2714(Y)	CHIP TRANSISTOR		
Q3 ,4			2SC3356	CHIP TRANSISTOR		
MIC AMP : Z7 (X59-3210-10)						
C1			CC73FCH1H101J	CHIP C 100PF J		
C2			C92-0004-05	CHIP TAN 1.0UF 16WV		
C3 ,4			CK73FB1E223K	CHIP C 0.022UF K		
C5			CC73FCH1H330J	CHIP C 33PF J		
C6			C92-0009-05	CHIP TAN 4.7UF 10WV		
C7			C92-0004-05	CHIP TAN 1.0UF 16WV		
C8			CC73FCH1H101J	CHIP C 100PF J		
C9			C92-0004-05	CHIP TAN 1.0UF 16WV		
C10			CK73FB1H123K	CHIP C 0.012UF K		
C11			CK73FB1H222K	CHIP C 2200PF K		
C12			CC73FCH1H330J	CHIP C 33PF J		
C13			C92-0004-05	CHIP TAN 1.0UF 16WV		
C14			CK73FB1H222K	CHIP C 2200PF K		
C15			CK73FB1H392K	CHIP C 3900PF K		
C16			CC73FCH1H221J	CHIP C 220PF J		
C17			CK73FB1H472K	CHIP C 4700PF K		
C18			C92-0004-05	CHIP TAN 1.0UF 16WV		

L:Scandinavia K:USA P:Canada
Y:PX(Far East, Hawaii) T:England E:Europe
Y:AAFES(Europe) X:Australia M:Other Areas

TKR-720 : K,M,K2,M2
TKR-720N : M,M2
TKR-720A : M,M2

⚠ indicates safety critical components.

PARTS LIST

* New Parts
Parts without Parts No. are not supplied.
Les articles non mentionnes dans le Parts No. ne sont pas fournis.
Teile ohne Parts No. werden nicht geliefert.

RX VCO : Z2 (X58-3290-XX)
TX VCO : Z5 (X58-3790-XX)

Ref. No. 参照番号	Address 位置	New Parts 新	Parts No. 部品番号	Description 部品名／規格	Destination 仕向	Remarks 備考
L6			L40-4772-80	CHIP INDUCTOR (47NH)		
R1			RK73FB2A221J	CHIP R 220 J 1/10W		
R2			RK73FB2A104J	CHIP R 100K J 1/10W		
R3 ,4			RK73FB2A331J	CHIP R 330 J 1/10W		
R5			RK73FB2A101J	CHIP R 100 J 1/10W		
R6			RK73FB2A153J	CHIP R 15K J 1/10W		
R7			RK73FB2A562J	CHIP R 5.6K J 1/10W		
R8			RK73FB2A331J	CHIP R 330 J 1/10W		
R9			RK73FB2A101J	CHIP R 100 J 1/10W		
R10			RK73FB2A183J	CHIP R 18K J 1/10W		
R11			RK73FB2A272J	CHIP R 2.7K J 1/10W		
R12			RK73FB2A392J	CHIP R 3.9K J 1/10W		
R13			RK73FB2A562J	CHIP R 5.6K J 1/10W		
R14			RK73FB2A121J	CHIP R 120 J 1/10W		
R15			RK73FB2A560J	CHIP R 56 J 1/10W		
R16			RK73FB2A101J	CHIP R 100 J 1/10W		
D1			1SV166	VARI-CAP DIODE		
Q1			2SK125	FET		
Q2			2SC2714(Y)	CHIP TRANSISTOR		
Q3 ,4			2SC3356	CHIP TRANSISTOR		
TX VCO : Z5 (X58-3790-XX) 10 : K,M,AM,NM 11 : K2,M2,AM2,NM2						
C1			CK73FB1H102K	CHIP C 1000PF K		
C2			CC73FCH1H150J	CHIP C 15PF J	K2M2	
C2			CC73FCH1H150J	CHIP C 15PF J	AM2NM2	
C2			CC73FCH1H180J	CHIP C 18PF J	KMAMNM	
C3			CC73FCH1H470J	CHIP C 47PF J	K2M2	
C3			CC73FCH1H470J	CHIP C 47PF J	AM2NM2	
C3			CC73FCH1H560J	CHIP C 56PF J	KMAMNM	
C4			CC73FCH1H090D	CHIP C 9PF D	KMAMNM	
C4			CC73FCH1H120J	CHIP C 12PF J	K2M2	
C4			CC73FCH1H120J	CHIP C 12PF J	AM2NM2	
C5			CC73FCH1H040C	CHIP C 4PF C	KMAMNM	
C5			CC73FCH1H060D	CHIP C 6PF D	K2M2	
C5			CC73FCH1H060D	CHIP C 6PF D	AM2NM2	
C6			CC73FCH1H060D	CHIP C 6PF D	KMAMNM	
C6			CC73FCH1H100D	CHIP C 10PF D	K2M2	
C6			CC73FCH1H100D	CHIP C 10PF D	AM2NM2	
C7			CK73FB1H102K	CHIP C 1000PF K		
C8			CC73FCH1H030C	CHIP C 3PF C		
C9			CK73FB1H102K	CHIP C 1000PF K		
C10			CC73FCH1H150J	CHIP C 15PF J		
C11			CC73FCH1H010C	CHIP C 1PF C	KMAMNM	
C11			CC73FCH1H030C	CHIP C 3PF C	K2M2	
C11			CC73FCH1H030C	CHIP C 3PF C	AM2NM2	
C12			CC73FCH1H080D	CHIP C 8PF D		
C13			CC73FCH1H050C	CHIP C 5PF C		
C14 -17			CK73FB1H102K	CHIP C 1000PF K		
C18			CE04CW1A101M	ELECTRO 100UF 10WV		
C19			CK73FB1H102K	CHIP C 1000PF K		
C20			CC73FCH1H010C	CHIP C 1PF C		
C21			CK73FB1H103K	CHIP C 0.010UF K		
C22			CK73FB1H102K	CHIP C 1000PF K		
TC1			C05-0353-05	TRIMMING CAP (10PF)		

L:Scandinavia K:USA P:Canada
Y:PX(Far East, Hawaii) T:England E:Europe
Y:AAFES(Europe) X:Australia M:Other Areas

TKR-720 : K,M,K2,M2
TKR-720N : M,M2
TKR-720A : M,M2

⚠ indicates safety critical components.

PARTS LIST

* New Parts
Parts without Parts No. are not supplied.
Les articles non mentionnes dans le Parts No. ne sont pas fournis.
Teile ohne Parts No. werden nicht geliefert.

MIC AMP : Z7 (X59-3210-10)
IF : Z8 (X59-3220-10)

Ref. No. 参照番号	Address 位置	New Parts 新	Parts No. 部品番号	Description 部品名／規格	Destination 仕向	Remarks 備考
-			E23-0471-05	TERMINAL		
R1			RK73FB2A473J	CHIP R 47K J 1/10W		
R2			RK73FB2A223J	CHIP R 22K J 1/10W		
R3			RK73FB2A561J	CHIP R 560 J 1/10W		
R4			RK73FB2A681J	CHIP R 680 J 1/10W		
R5			RK73FB2A561J	CHIP R 560 J 1/10W		
R6			RK73FB2A104J	CHIP R 100K J 1/10W		
R7			RK73FB2A102J	CHIP R 1.0K J 1/10W		
R8			RK73FB2A333J	CHIP R 33K J 1/10W		
R9			RK73FB2A393J	CHIP R 39K J 1/10W		
R10			RK73FB2A104J	CHIP R 100K J 1/10W		
R11			RK73FB2A683J	CHIP R 68K J 1/10W		
R12			RK73FB2A224J	CHIP R 220K J 1/10W		
R13			RK73FB2A474J	CHIP R 470K J 1/10W		
R14			RK73FB2A123J	CHIP R 12K J 1/10W		
R15			RK73FB2A154J	CHIP R 150K J 1/10W		
R16			RK73FB2A272J	CHIP R 2.7K J 1/10W		
R17			RK73FB2A822J	CHIP R 8.2K J 1/10W		
R18			RK73FB2A103J	CHIP R 10K J 1/10W		
R19 ,20			RK73FB2A104J	CHIP R 100K J 1/10W		
R21			RK73FB2A103J	CHIP R 10K J 1/10W		
R22			RK73FB2A272J	CHIP R 2.7K J 1/10W		
R23			RK73FB2A393J	CHIP R 39K J 1/10W		
R24			RK73FB2A123J	CHIP R 12K J 1/10W		
R25			RK73FB2A333J	CHIP R 33K J 1/10W		
R26 ,27			RK73FB2A472J	CHIP R 4.7K J 1/10W		
R28			RK73FB2A683J	CHIP R 68K J 1/10W		
IC1			NJM4560M	IC(OP AMP X2)		
IC2 ,3			NJM4558M	IC(OP AMP X2)		
Q1			2SC3326(A)	CHIP TRANSISTOR		
IF : Z8 (X59-3220-10)						
C1			CK73FB1H102K	CHIP C 1000PF K		
C2			CC73FCH1H220J	CHIP C 22PF J		
C3			CC73FCH1H470J	CHIP C 47PF J		
C4 -7			CK73EB1E104K	CHIP C 0.10UF K		
C8			C92-0003-05	CHIP TAN 0.47UF 25WV		
C9 ,10			CC73FCH1H680J	CHIP C 68PF J		
C11			CK73FB1H332K	CHIP C 3300PF K		
C12			CK73FB1H102K	CHIP C 1000PF K		
C14			C92-0003-05	CHIP TAN 0.47UF 25WV		
C17			CK73FB1E223K	CHIP C 0.022UF K		
C19			CK73FB1H102K	CHIP C 1000PF K		
C20			CC73FCH1H470J	CHIP C 47PF J		
-			E23-0471-05	TERMINAL		
R1			RK73FB2A203J	CHIP R 20K J 1/10W		
R3			RK73FB2A272J	CHIP R 2.7K J 1/10W		
R4			RK73FB2A334J	CHIP R 330K J 1/10W		
R5 ,6			RK73FB2A153J	CHIP R 15K J 1/10W		
R7			RK73FB2A821J	CHIP R 820 J 1/10W		
R10			RK73FB2A224J	CHIP R 220K J 1/10W		
R13			RK73FB2A392J	CHIP R 3.9K J 1/10W		
R14			RK73FB2A223J	CHIP R 22K J 1/10W		

L:Scandinavia K:USA P:Canada
Y:PX(Far East, Hawaii) T:England E:Europe
Y:AAFES(Europe) X:Australia M:Other Areas

TKR-720 : K,M,K2,M2
TKR-720N : M,M2
TKR-720A : M,M2

⚠ indicates safety critical components.

PARTS LIST

× New Parts
Parts without Parts No. are not supplied.
Les articles non mentionnes dans le Parts No. ne sont pas fournis.
Teile ohne Parts No. werden nicht geliefert.

IF : Z8 (X59-3220-10)
BPF/VCA : Z9 (X59-3230-10)
FINAL ASSY UNIT (X60-3230-XX)

Ref. No. 参照番号	Address 位置	New Parts 新	Parts No. 部品番号	Description 部品名／規格	Destination 仕向	Remarks 備考
R15			RK73FB2A821J	CHIP R 820 J 1/10W		
R16			RK73FB2A223J	CHIP R 22K J 1/10W		
D1			DA204K	CHIP DIODE		
IC1			MC3361BD	IC(FM IF SYSTEM)		
Q1			2SC2712(Y)	CHIP TRANSISTOR		
BPF/VCA : Z9 (X59-3230-10)						
C1 -4			C93-0502-05	CHIP C 1800PF G		
C5 -9			C93-0501-05	CHIP C 680PF G		
C10			CK73FB1H222K	CHIP C 2200PF K		
C11			C92-0004-05	CHIP TAN 1.0UF 16WV		
C12			CK73FB1H472K	CHIP C 4700PF K		
C13			CK73FB1H102K	CHIP C 1000PF K		
C14			C92-0004-05	CHIP TAN 1.0UF 16WV		
-			E23-0471-05	TERMINAL		
R1			RK73FB2A273J	CHIP R 27K J 1/10W		
R2			RK73FB2A822J	CHIP R 8.2K J 1/10W		
R3			RK73FB2A184J	CHIP R 180K J 1/10W		
R4			RK73FB2A224J	CHIP R 220K J 1/10W		
R5			RK73FB2A394J	CHIP R 390K J 1/10W		
R6			RK73FB2A134G	CHIP R 130K G 1/10W		
R7			RK73FB2A105G	CHIP R 1.0M G 1/10W		
R8			RK73FB2A683G	CHIP R 68K G 1/10W		
R9			RK73FB2A105G	CHIP R 1.0M G 1/10W		
R10			RK73FB2A514G	CHIP R 510K G 1/10W		
R11			RK73FB2A105G	CHIP R 1.0M G 1/10W		
R12			RK73FB2A514G	CHIP R 510K G 1/10W		
R13			RK73FB2A303G	CHIP R 30K G 1/10W		
R14 ,15			RK73FB2A473J	CHIP R 47K J 1/10W		
R16			RK73FB2A472J	CHIP R 4.7K J 1/10W		
R17			RK73FB2A101J	CHIP R 100 J 1/10W		
R18			RK73FB2A183J	CHIP R 18K J 1/10W		
R19			RK73FB2A124J	CHIP R 120K J 1/10W		
R20 ,21			RK73FB2A223J	CHIP R 22K J 1/10W		
R22			RK73FB2A183J	CHIP R 18K J 1/10W		
R23			R92-0670-05	CHIP R 0 OHM		
IC1 ,2			NJM4558M	IC(OP AMP X2)		
IC3			M5222FP	IC(OP AMP X2)		
IC4			NJM4558M	IC(OP AMP X2)		
FINAL ASSY UNIT (X60-3230-XX) 10 : K,M,AM 11 : K2,M2,AM2 12 : NM 13 : NM2						
			E31-6028-05	CONNECTING WIRE		
J1			E04-0167-05	RF COAXIAL CABLE RECEPTACLE		
W2			E31-3256-05	CONNECTING WIRE		
W6			E31-3123-05	CONNECTING WIRE(TX)		
100	3D		E37-0059-15	DC CABLE		
101	2D		F01-0966-11	HEAT SINK		
102	1D		F11-1115-02	SHIELDING COVER		
103	2D		F11-1119-04	SHIELDING COVER		
104	2D		G10-0668-04	FELT		
			J21-4245-04	MOUNTING HARDWARE(FINAL UNIT)		
105	1D		J19-1431-05	LEAD HOLDER		
106	3D		J19-1433-05	LEAD HOLDER		

L:Scandinavia K:USA P:Canada
Y:PX(Far East, Hawaii) T:England E:Europe
Y:AAFES(Europe) X:Australia M:Other Areas

TKR-720 : K,M,K2,M2
TKR-720N : M,M2
TKR-720A : M,M2

⚠ indicates safety critical components.

PARTS LIST

* New Parts
Parts without Parts No. are not supplied.
Les articles non mentionnes dans le Parts No. ne sont pas fournis.
Teile ohne Parts No. werden nicht geliefert.

FINAL ASSY UNIT (X60-3230-XX)

Ref. No. 参照番号	Address 位置	New Parts 新	Parts No. 部品番号	Description 部品名／規格	Destination 仕向	Remarks 備考
109	1D		N16-0040-41	SPRING WASHER		
I	1D		N87-3008-46	SECOND BRAZIERTAP TIGHT SCREW		
N	1D,2D		N67-3010-41	SEMUS SCREW (MODULE TR)		
O	1D		N32-3008-41	FLAT HEAD MACHINE SCREW		
P	1D		N35-3008-41	BINDING HEAD MACHINE SCREW		
R	3D		N90-3008-46	TP HEAD MACHINE SCREW		
V	1D		N35-4006-46	SECOND BRAZIERTAP TIGHT SCREW		
W	1D		N89-3010-45	BINDING HEAD MACHINE SCREW		
107	2D		X45-3310-10	DRIVE UNIT	KMAMNM	
107	2D		X45-3310-11	DRIVE UNIT	K2M2	
107	2D		X45-3310-11	DRIVE UNIT	AM2NM2	
108	2D		X45-3320-11	FINAL UNIT	KMAMNM	
108	2D		X45-3320-12	FINAL UNIT	K2M2	
108	2D		X45-3320-12	FINAL UNIT	AM2NM2	

L:Scandinavia **K:**USA **P:**Canada
Y:PX(Far East, Hawaii) **T:**England **E:**Europe
Y:AAFES(Europe) **X:**Australia **M:**Other Areas

TKR-720 : K,M,K2,M2
TKR-720N : M,M2
TKR-720A : M,M2

⚠ indicates safety critical components.

TKR-720/N/A

EXPLODED VIEW

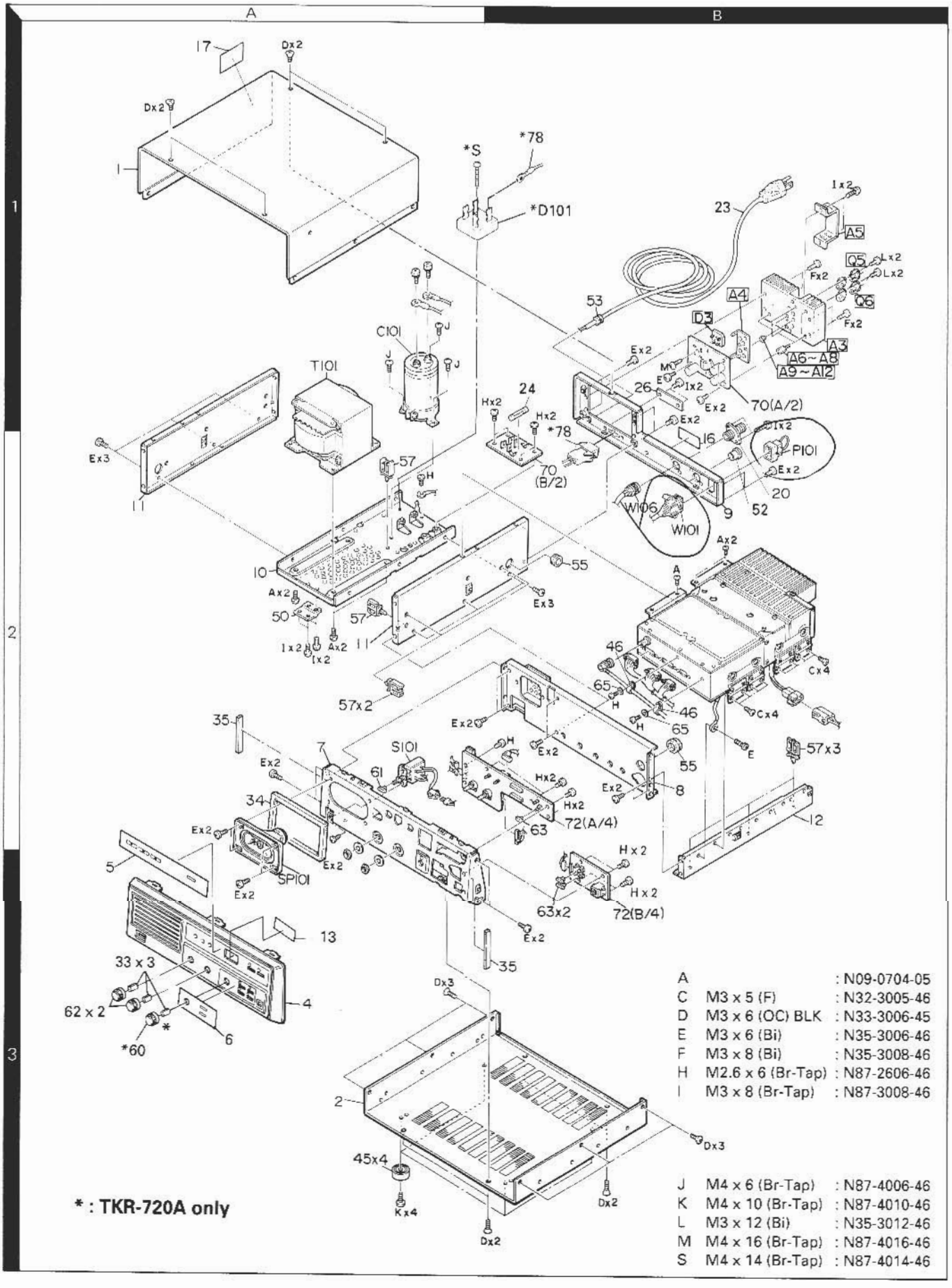

EXPLODED VIEW

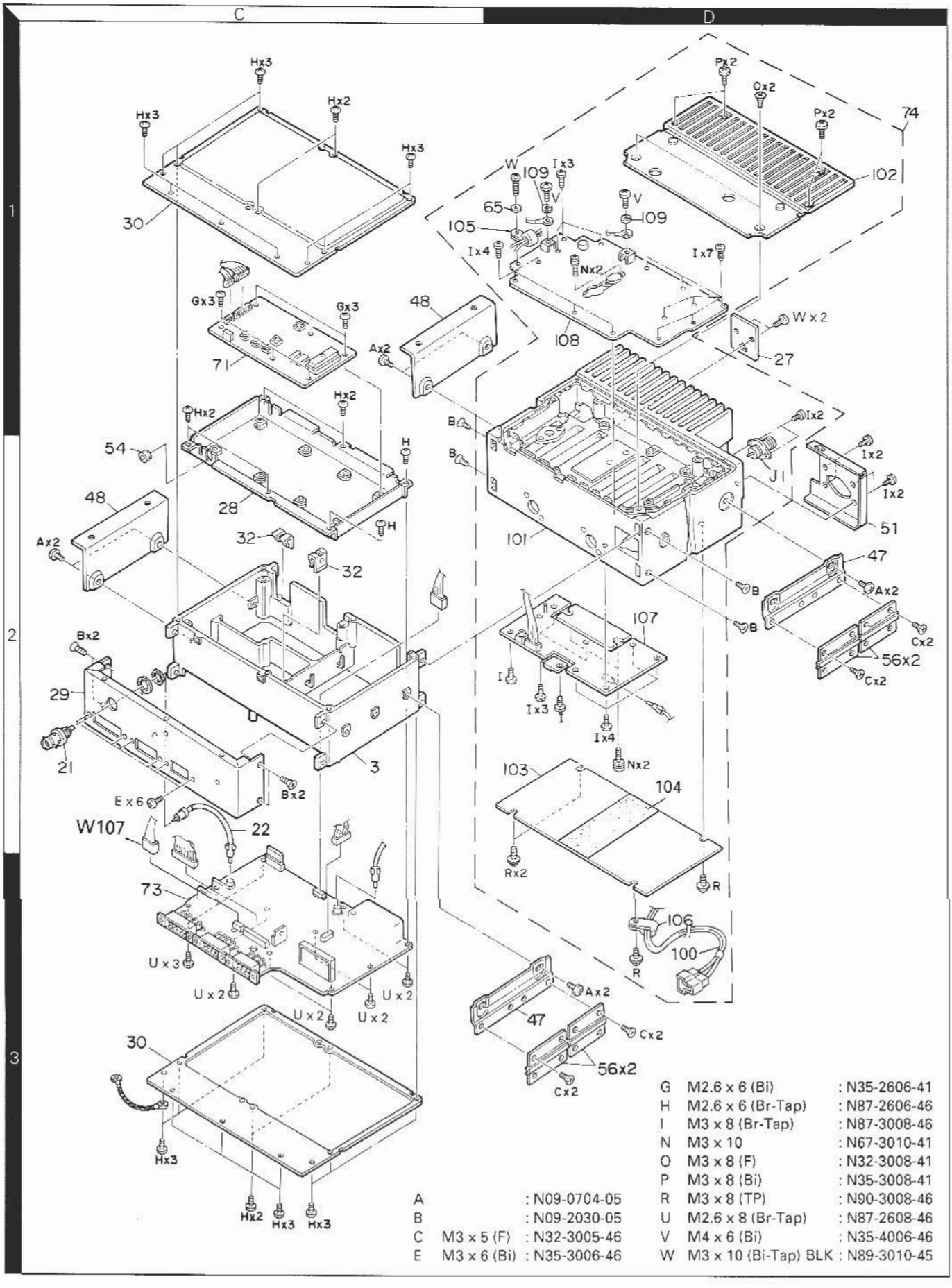

A		: N09-0704-05
B		: N09-2030-05
C	M3 x 5 (F)	: N32-3005-46
E	M3 x 6 (Bi)	: N35-3006-46
G	M2.6 x 6 (Bi)	: N35-2606-41
H	M2.6 x 6 (Br-Tap)	: N87-2606-46
I	M3 x 8 (Br-Tap)	: N87-3008-46
N	M3 x 10	: N67-3010-41
O	M3 x 8 (F)	: N32-3008-41
P	M3 x 8 (Bi)	: N35-3008-41
R	M3 x 8 (TP)	: N90-3008-46
U	M2.6 x 8 (Br-Tap)	: N87-2608-46
V	M4 x 6 (Bi)	: N35-4006-46
W	M3 x 10 (Bi-Tap) BLK	: N89-3010-45

PACKING

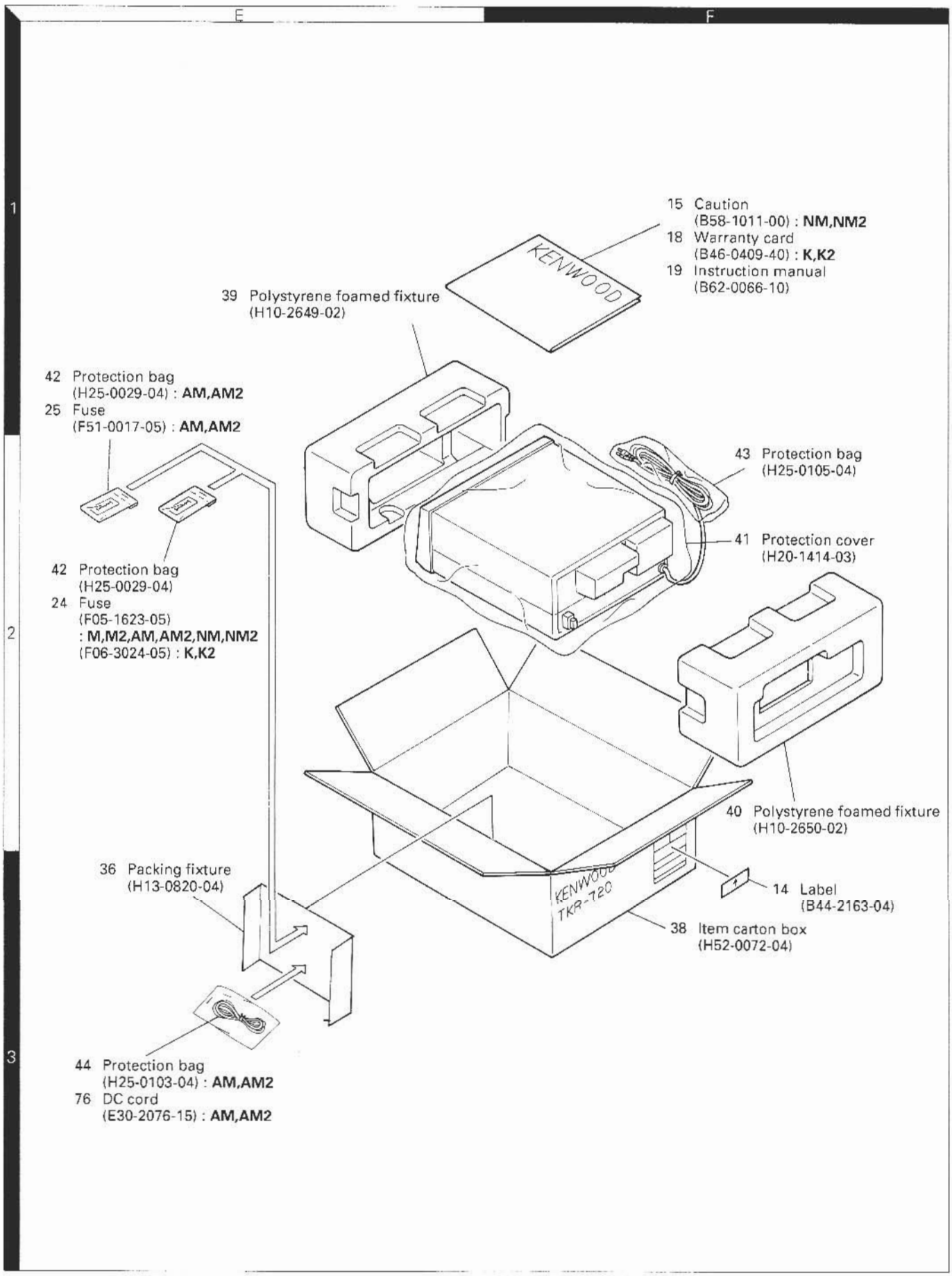
E
F
1
2
3
15 Caution
(B58-1011-00) : NM,NM2
18 Warranty card
(B46-0409-40) : K,K2
19 Instruction manual
(B62-0066-10)
KENWOOD
39 Polystyrene foamed fixture
(H10-2649-02)
42 Protection bag
(H25-0029-04) : AM,AM2
25 Fuse
(F51-0017-05) : AM,AM2
43 Protection bag
(H25-0105-04)
41 Protection cover
(H20-1414-03)
42 Protection bag
(H25-0029-04)
24 Fuse
(F05-1623-05)
: M,M2,AM,AM2,NM,NM2
(F06-3024-05) : K,K2
40 Polystyrene foamed fixture
(H10-2650-02)
36 Packing fixture
(H13-0820-04)
KENWOOD
TKR-720
14 Label
(B44-2163-04)
38 Item carton box
(H52-0072-04)
44 Protection bag
(H25-0103-04) : AM,AM2
76 DC cord
(E30-2076-15) : AM,AM2

ADJUSTMENT

Test Equipment Required for Alignment

Test Equipment	Major Specifications	
1. Standard Signal Generator (SSG)	Frequency Range Modulation Output	136 to 174MHz Frequency modulation and external modulation 0.1μV to greater than 1mV
2. Power meter	Input Impedance Operation Frequency Measurement Capability	50Ω 136 to 174MHz or more Vicinity of 50W
3. Deviation meter	Frequency Range	136 to 174MHz
4. Digital Volt Meter (DVM)	Measuring Range Accuracy	1 to 10V DC High input impedance for minimum circuit loading
5. Oscilloscope		DC through 30MHz
6. High Sensitivity Frequency Counter	Frequency Range Frequency Stability	10Hz to 600MHz 0.2ppm or less
7. Ammeter		15A
8. AF Volt Meter (AF VTVM)	Frequency Range Voltage Range	50Hz to 10kHz 3mV to 3V
9. Audio Generator (AG)	Frequency Range Output	50Hz to 5kHz or more 0 to 1V
10. Distortion Meter	Capability Input Level	3% or less at 1kHz 50mV to 10Vrms
11. Voltmeter	Measuring Range Input Impedance	10 to 1.5V DC or less 50kΩ/V or greater
12. 4Ω Dummy Load		Approx. 4Ω, 3W

The set has been adjusted for the frequencies shown in the following table. When required, re-adjust them following the adjustment procedure to obtain the frequencies you want in actual operation.

Type	RX freq' (MHz)	TX freq' (MHz)
K,M,NM,AM	173.900	168.900
K2,M2,NM2,AM2	149.900	144.900

TKR-720 : K,K2,M,M2
TKR-720N : M,M2
TKR-720A : M,M2

Signaling

CH	RX		TX	
	QT (Hz)	DQT	QT (Hz)	DQT
1	210.7			023
2	67		77	
3	192.8		179.9	
4	77			754
5	88.5		167.9	
6	100			351

MIC connector front view

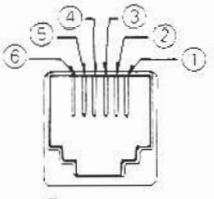

① SB
② PTTG
③ PTT
④ MICG
⑤ MIC
⑥ HOOK

- The following test cables are recommended.

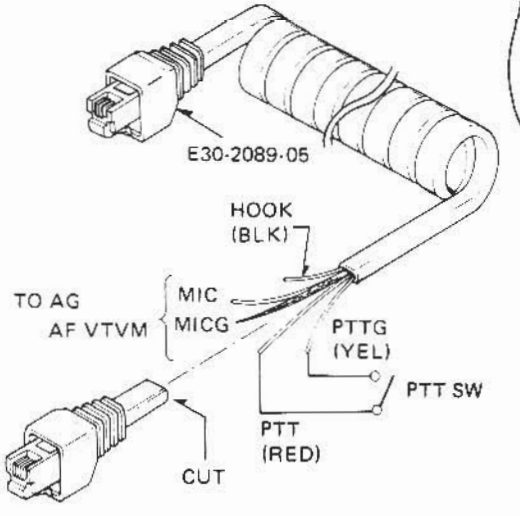

Test cable for Microphone input

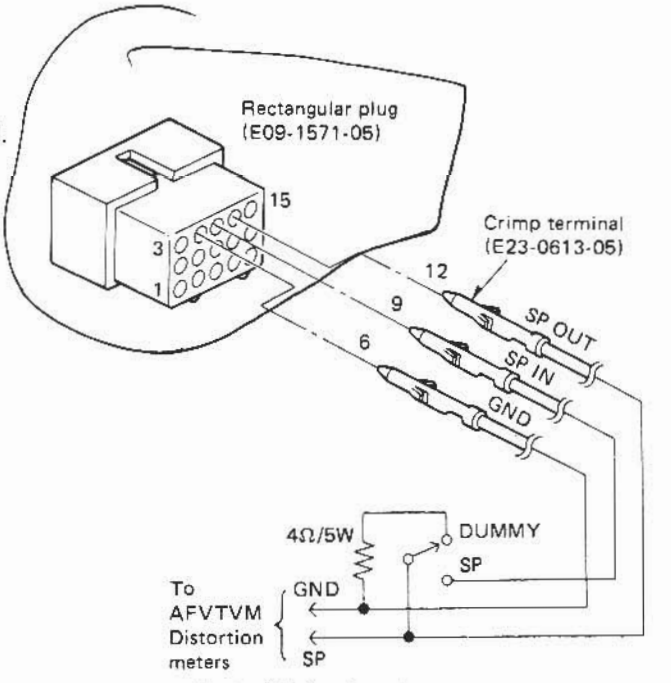

Test cable for Speaker output

ADJUSTMENT

Adjustment location

Top view

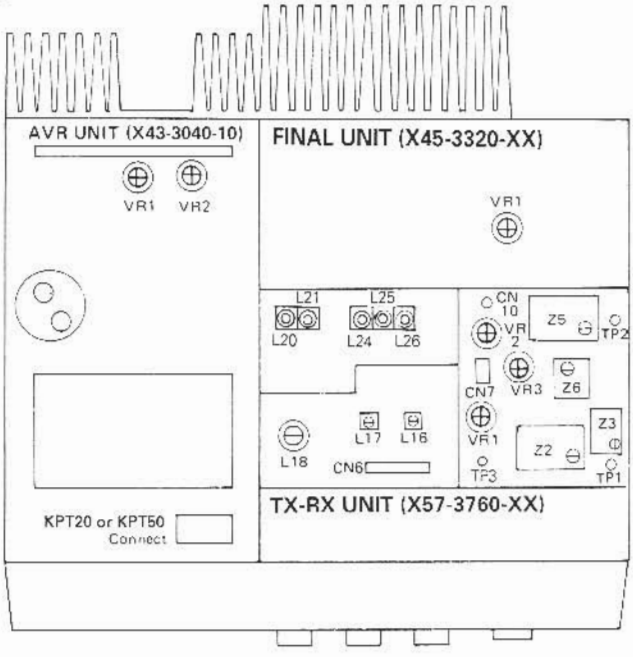

Adjustment points

SIGNALING UNIT (X52-3140-10)

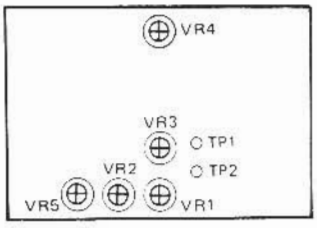

Bottom view

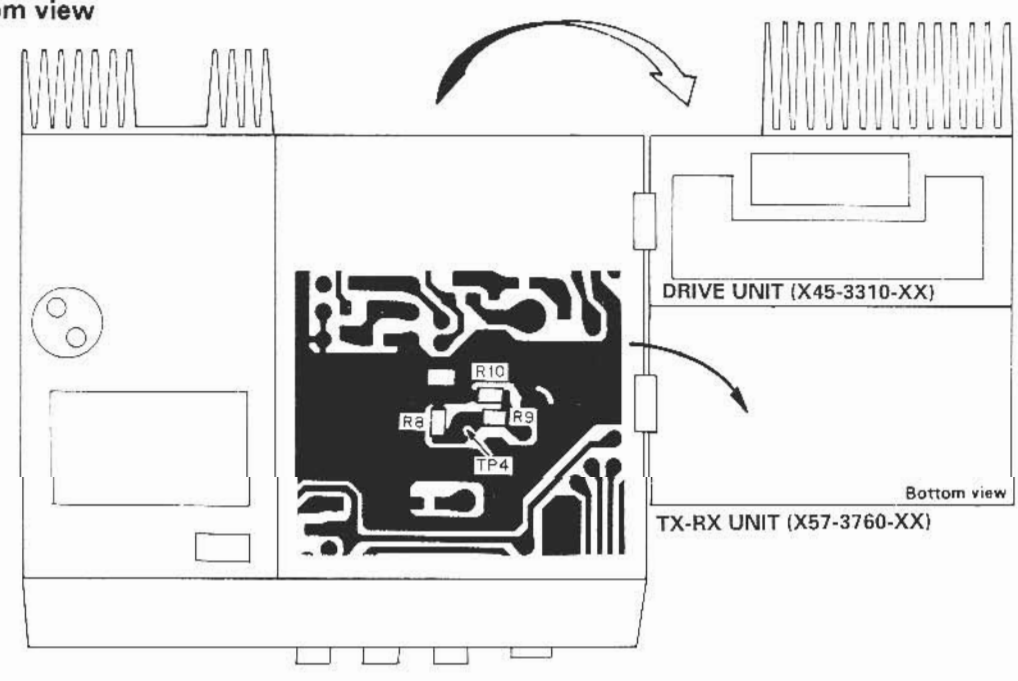

Front panel view

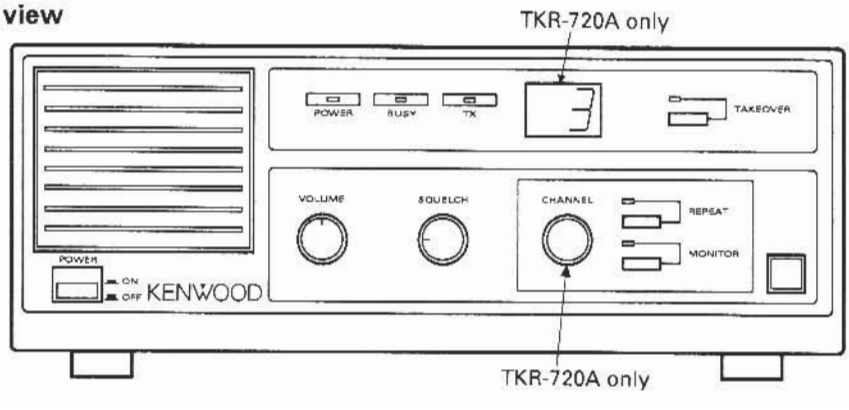

ADJUSTMENT

Alignment

Item	Condition	Measurement			Adjustment			Specifications/Remarks
		Test-equipment	Unit	Terminal	Unit	Parts	Method	
1. Setting	1) AC voltage for destination : 120V **K,K2** : 220V **M,M2,NM,NM2, AM,AM2** 2) Connect to the DC output (OUT terminal) and GND of the AVR unit (*).	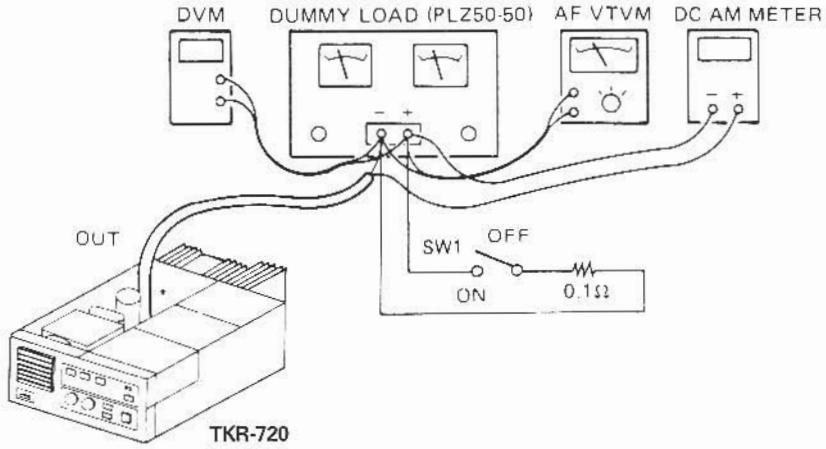						
2. Test equipment set-up	1) Function : 0.1Ω resistor Meter : 60A, 60V DC : ON Power : ON SW1 : OFF							
3. Voltage setting	1) Power switch : ON	DVM	AVR	OUT	AVR	VR1	Adjust the load for 10A.	13.6V±0.4V (Verify power indicator lights.)
	2) Vary the load for 2A to 10A draw. (Set to 10A after check.)	DVM AF VTVM					Check	13.6V±0.7V DC **K,K2,M,M2,NM,NM2** 13.6V±1.3VDC **AM,AM2** Less than 30mV AC
	3) Power switch : OFF							
4. Protection	1) SW1 : ON VR2 : MAX CW. Power switch : ON	DVM	AVR	OUT	AVR	VR2	0.25V	±0.05V
	2) SW1 : OFF						Check	13.6V±0.4V
5. Setting	1) Write in frequency designed with EEPROM writer. (For frequency writing, set the power of TKR-720 to ON.) 2) Connect the power cable to the rear panel. 3) Final unit VR1 : MAX CCW. 4) TX-RX unit VR1, VR3 : MAX CCW. 5) Power switch : ON	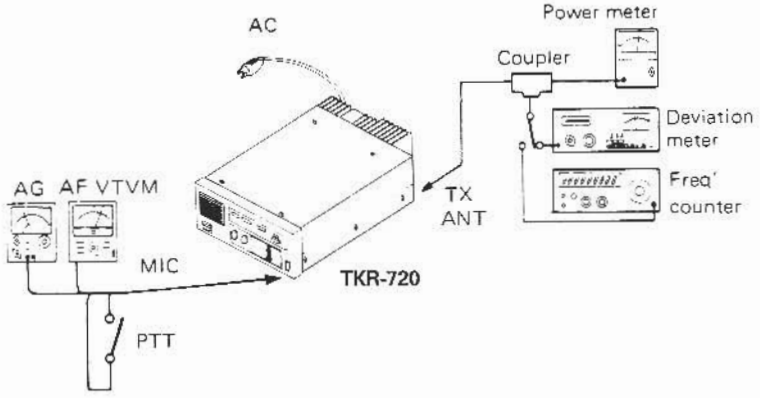						

ADJUSTMENT

Item	Condition	Measurement			Adjustment			Specifications/Remarks
		Test-equipment	Unit	Terminal	Unit	Parts	Method	
6. RX PLL lock voltage		DVM	TX-RX	TP1	TX-RX	Z2	4.0V	±0.5V
7. TX PLL lock voltage				TP2		Z5	4.0V	±0.5V
8. TCXO frequency adjustment	1) PTT : OFF (RX) **Note :** TCXO is adjusted precisely at 25°C. If it is readjusted, the frequency stability is changed. Do not touch it normally.	Power meter f. counter	TX-RX	TP4 (Foil side)	TX-RX	Z3	f – 21.4MHz	±100Hz
9. Power adjustment (APC)	1) PTT : ON	Power meter Ammeter	Rear panel	TX ANT	Final	VR1	MAX CW	58W or more
							MIN	15W or less
							50W	±1W
10. Transmit frequency	1) PTT : ON	Power meter f. counter	Rear panel	TX ANT	TX-RX	Z6	Adjust the transmit frequency	±200Hz
11. Tone deviation adjustment	1) QT tone frequency being written. Deviation meter filter LPF : 3kHz HPF : OFF De-emphasis : OFF PTT : ON	Power meter Deviation meter	Rear panel	TX ANT	Signaling	VR4	±0.9kHz **K,K2,M, M2,AM,AM2** ±0.45kHz **NM,NM2**	±100Hz
12. Maximum deviation adjustment	1) Connect AG to the MIC terminal. AG : 1kHz/50mV Deviation meter filter LPF : 20kHz HPF : 50Hz De-emphasis : 750μsec. TX-RX unit VR1 : MAX CW. PTT : ON	AG	Front panel	MIC	TX-RX	VR2	±4.4kHz (±4.9kHz in use of signaling.) **K,K2,M, M2,AM,AM2** ±2.2kHz (±2.45kHz in use of signaling.) **NM,NM2** Adjust one more than the other by switching between –P and +P.	±200Hz
13. MIC sensitivity adjustment	1) AG : 1kHz/5mV PTT : ON					VR1	±3.0kHz (±3.9kHz in use of signaling.) **K,K2,M, M2,AM,AM2** ±1.5kHz (±1.95kHz in use of signaling.) **NM,NM2**	±200Hz
14. DQT waveform correction (For DQT use only)	1) Connect AG to the TX-RX (TP3) and enter a square wave of 100Hz, 2Vp-p. Deviation meter filter : OFF PTT : ON	Power meter Deviation meter Oscilloscope AG	Rear panel TX-RX	TX ANT TP3	TX-RX	VR3	Make the demodulation waveform neat.	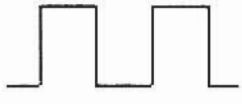

ADJUSTMENT

Item	Condition	Measurement			Adjustment			Specifications/Remarks
		Test-equipment	Unit	Terminal	Unit	Parts	Method	
15. RX sensitivity adjustment		AF VTVM 4Ω dummy load	Rear panel	EXT. SP	Front panel	VOL.	0.78V/4Ω (Noise)	
		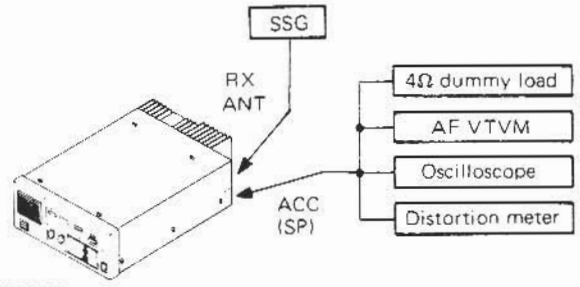 TKR-720						
	1) SSG output : 500μV/–53dBm MOD : OFF	AF VTVM Distortion meter 4Ω dummy load SSG	Rear panel	EXT. SP RX ANT	TX-RX	L20 L21 L24 L25 L26	Reduce noise level using L20, L21, L24, L25 and L26. Decrease the SSG output so that noise level is always 20 to 30dB lower than 0.45V. Repeat 3 to 4 times.	
	2) SSG output : 500μV/–53dBm MOD : 1kHz DEV : 3kHz **K,K2,M,M2, AM,AM2** DEV : 1.5kHz **NM,NM2**					L18	Adjust for maximum AF output.	
	3) SSG output : 0.32μV/–117dBm					L16 L17	Adjust for maximum SINAD.	
					Front panel	VOL.	0.45V/4Ω	
							Check	SINAD 12dB or more.
	4) SSG output : 500μV/–53dBm				Front panel	VOL.	4.0V/4Ω	
							Check	S/N 45dB or more. **K,K2,M,M2,AM,AM2** S/N 39dB or more. **NM,NM2** Distortion : 5% or less.
16. Squelch	1) SSG output : OFF Rotate SQL VR to a point at which noise disappears.	AF VTVM 4Ω dummy load Oscilloscope	Rear panel	EXT. SP			Check	SQL index angle 8 : 00 ~ 10 : 00
	2) SSG output : 0.2μV/–121dBm	SSG		RX ANT				Squelch should open.
17. Preset squelch adjustment	1) Signaling unit VR1 to VR5 : MAX CCW. SSG output : OFF	SSG	Rear panel	RX ANT			Check	D7 : LED should light.
					Signaling	VR1	MAX CW.	D7 : LED should go out.
	2) SSG output : 0.17μV/–124dBm						Rotate VR1 CCW. to a point at which D7 lights.	

ADJUSTMENT

Item	Condition	Measurement			Adjustment			Specifications/Remarks
		Test-equipment	Unit	Terminal	Unit	Parts	Method	
18. Hangup timer adjustment	1) SSG output : 1.58μV/–103dBm The set time can be continuously varied by VR2. 0 ~ 5V → 0 ~ 5 sec.	DVM	Signaling	TP2	Signaling	VR2	1.0V	±0.1V
	2) SSG output : 501μV/–53dBm REPEAT switch : ON	Power meter SSG	Rear panel	TX ANT RX ANT			Check	TX LED should light. REPEAT LED should light.
	3) SSG output : OFF							TX LED should go out about 1 sec. later after turning SSG OFF.
19. T.O.T	1) The set time can be continuously varied by VR3. 0 ~ 0.3V : OFF ~ 0.5V : 30 sec. ~ 5V : ~ 5 min.	DVM	Signaling	TP1	Signaling	VR3	Set it to the target time.	
20. Repeater TX deviation	1) SSG output : 501μV/–53dBm	Power metr Deviation meter SSG	Rear panel	EXT. SP RX ANT	Signaling	VR5	±3.0kHz **K,K2,M M2,AM,AM2** ±1.5kHz **NM,NM2**	±100Hz
21. Signaling squelch	1) SSG output : Turn the SSG output so that the SINAD sensitivity becomes 10dB.							
	2) SSG MOD SW : EXT. MOD AG1 : 1kHz AG2 : QT tone frequency							
	3) AG1 : Power switch OFF AG2 output : Adjust the output level of AG2 so that the SSG deviation becomes 0.9kHz (**K,K2,M,M2,AM, AM2**), 0.45kHz (**NM,NM2**).							
	4) AG1 : Power switch ON AG1 output : Adjust the output level of AG1 so that the SSG deviation becomes 3.9kHz (**K,K2,M,M2,AM, AM2**), 1.95kHz (**NM,NM2**). (i.e., QT tone frequency/ 0.9kHz (**K,K2,M,M2,AM, AM2**), 0.45kHz (**NM,NM2**) deviation, +1kHz/ 3kHz (**K,K2,M,M2,AM,AM2**), 1.5kHz (**NM,NM2**) deviation) MONITOR switch : OFF		Rear panel	EXT. SP			Check	Open.
22. TAKEOVER	1) TAKEOVER switch : ON						Check	The TAKEOVER LED should light.

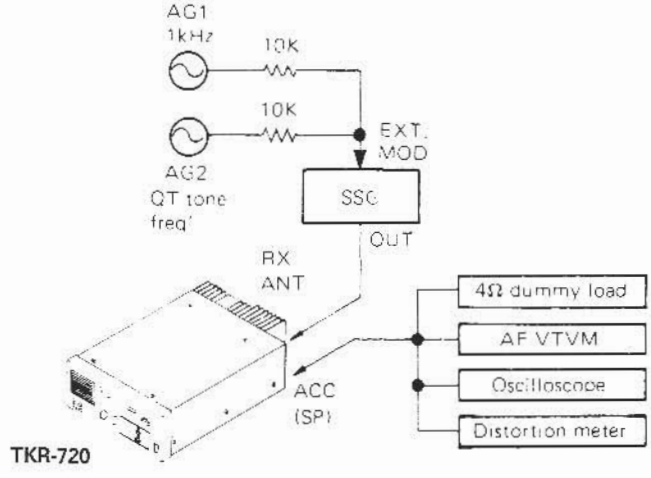

PC BOARD VIEWS/CIRCUIT DIAGRAM TKR-720/N/A

RX PLL : Z1, TX PLL : Z4 (X58-3140-XX) -10 : K,M,AM,K2,M2,AM2 -51 : NM,NM2

RX PLL, TX PLL (X58-3140-XX)

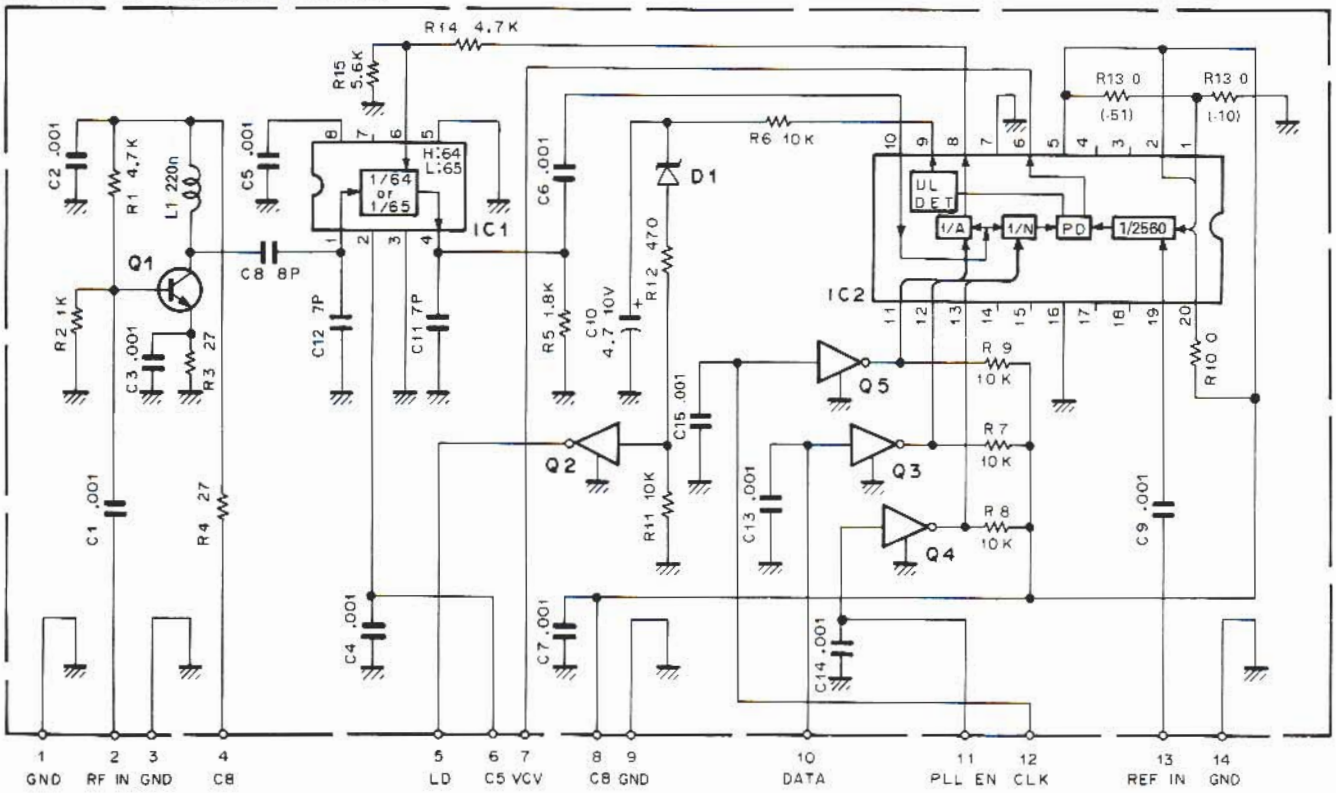

Q1 : 2SC2714(Y)
Q2~5 : DTC114EK

IC1 : MB504F
IC2 : JLC1075F or JLC1075DW

D1 : RD3.0M(B2)

Component side view

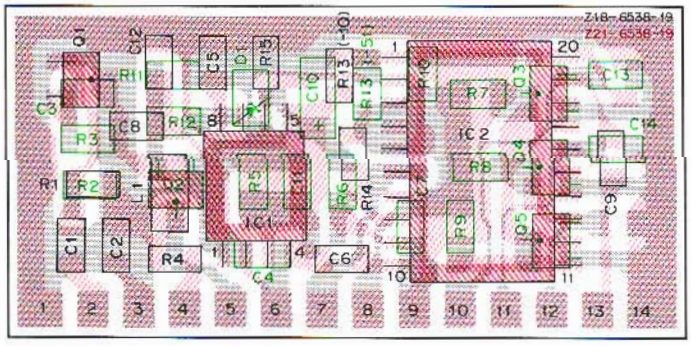

Foil side view

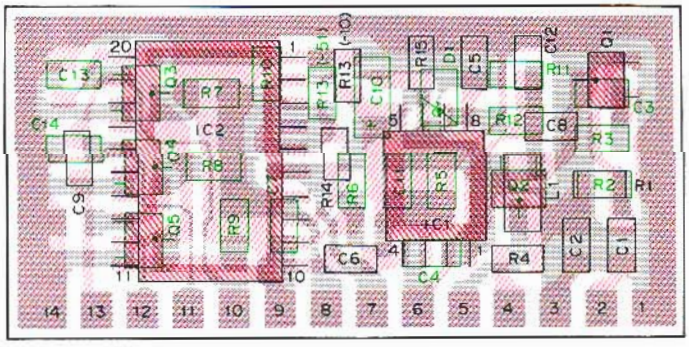

JLC1075F

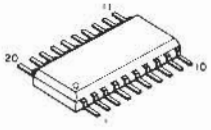

2SC2714
DTC114EK

MB504F

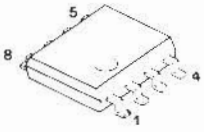

: Component side
: Foil side

PC BOARD VIEWS/CIRCUIT DIAGRAM

RX VCO : Z2 (X58-3290-XX) -10 : K,M,NM,AM -11 : K2,M2,NM2,AM2

RX VCO (X58-3290-XX)

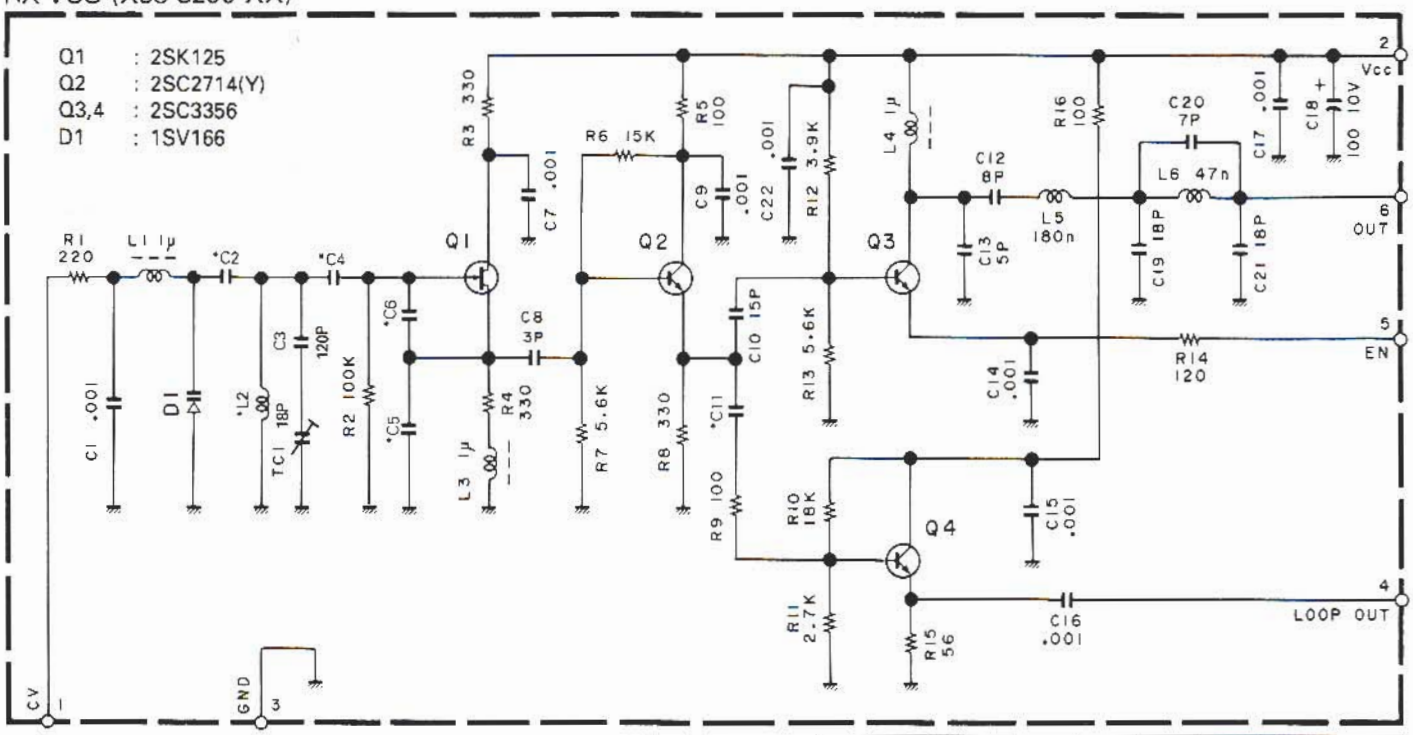

UNITS	C2	C4	C5	C6	C11	L2
X58-3290-10	27P	15P	6P	10P	1P	L34-2309-05
X58-3290-11	22P	18P	9P	15P	3P	L32-0658-05

Component side view

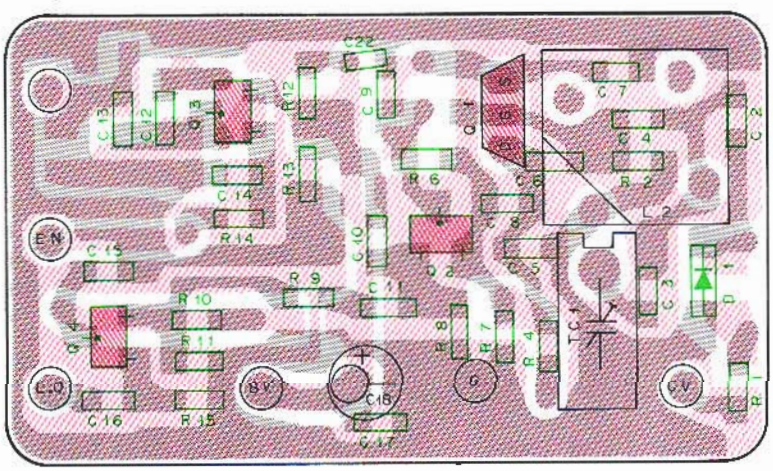

2SK125

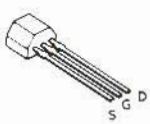

2SC2714
2SC3356

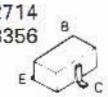

Foil side view

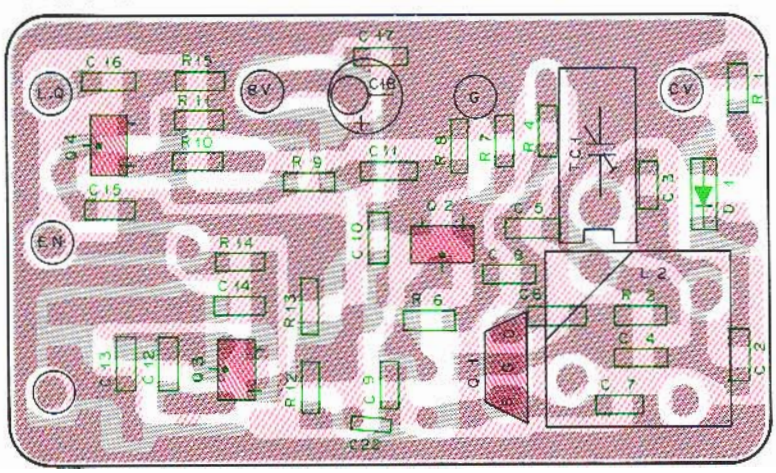

: Component side
: Foil side

TX VCO : Z5 (X58-3790-XX) -10 : K,M,NM,AM -11 : K2,M2,NM2,AM2

TX VCO (X58-3790-XX)

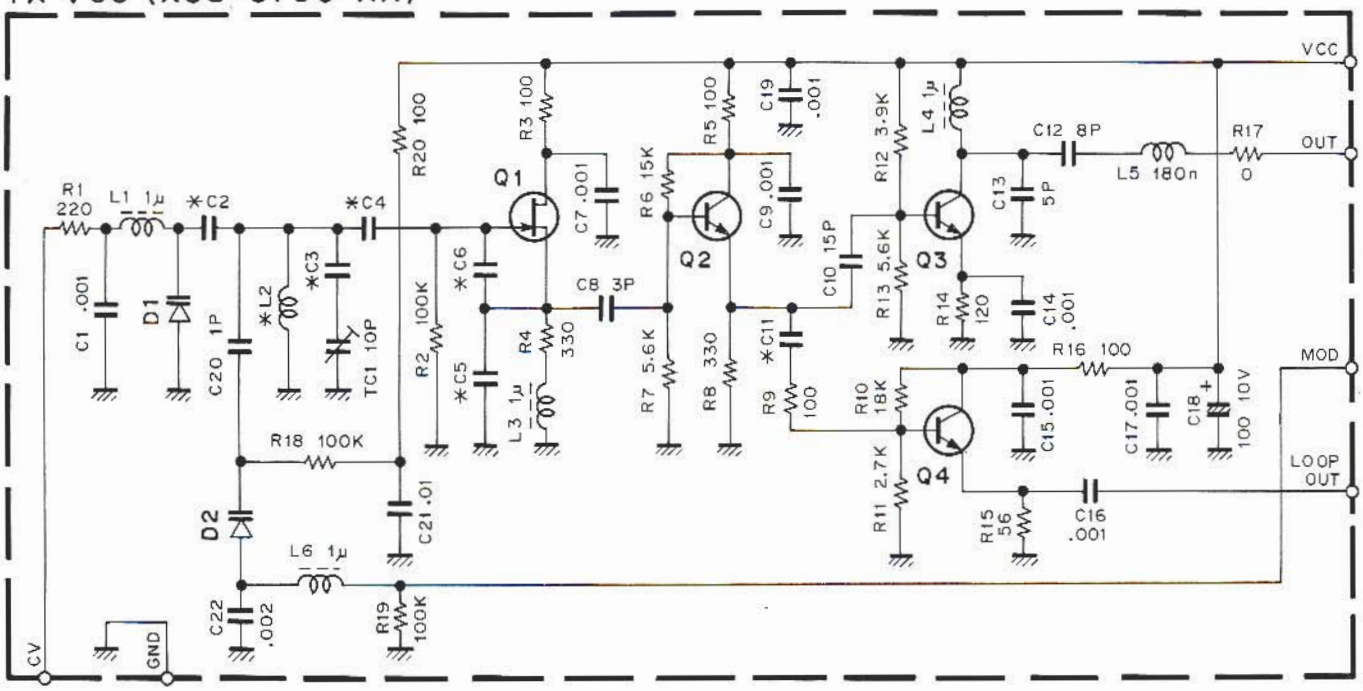

Q1 : 2SK125 D1 : 1SV166
Q2 : 2SC2714(Y) D2 : 1SV164
Q3,4 : 2SC3356

	C2	C3	C4	C5	C6	C11	L2
-10	18P	56P	9P	4P	6P	1P	L34-2309-05
-11	15P	47P	12P	6P	10P	3P	L32-0658-05

Component side view

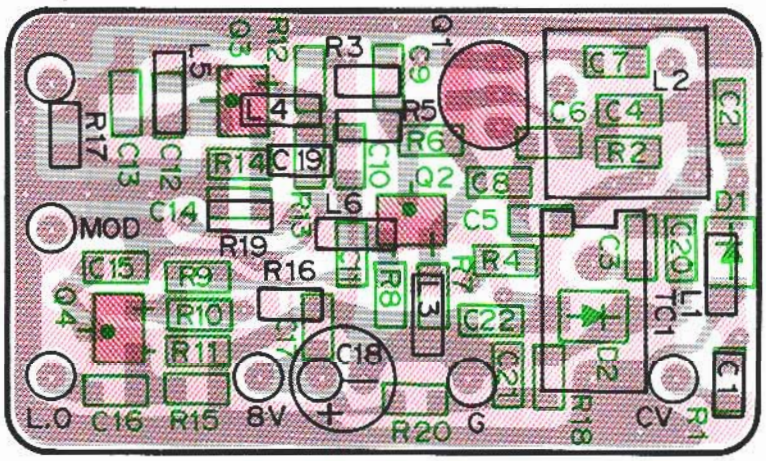

Foil side view

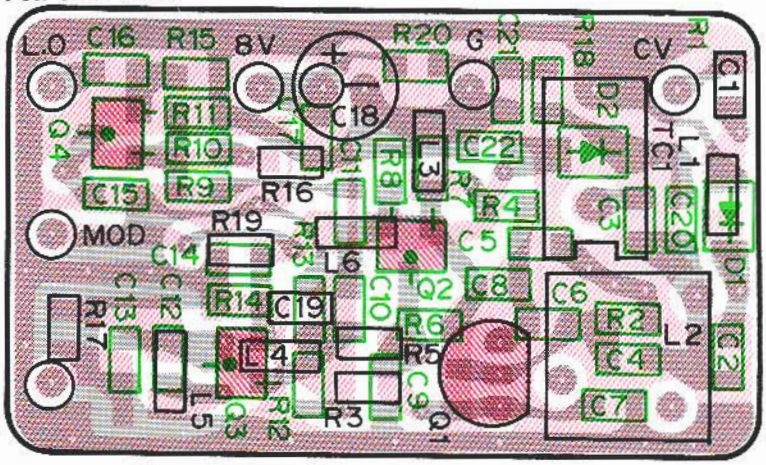

: Component side
: Foil side

MIC AMP : Z7 (X59-3210-10)

MIC AMP UNIT (X59-3210-10)

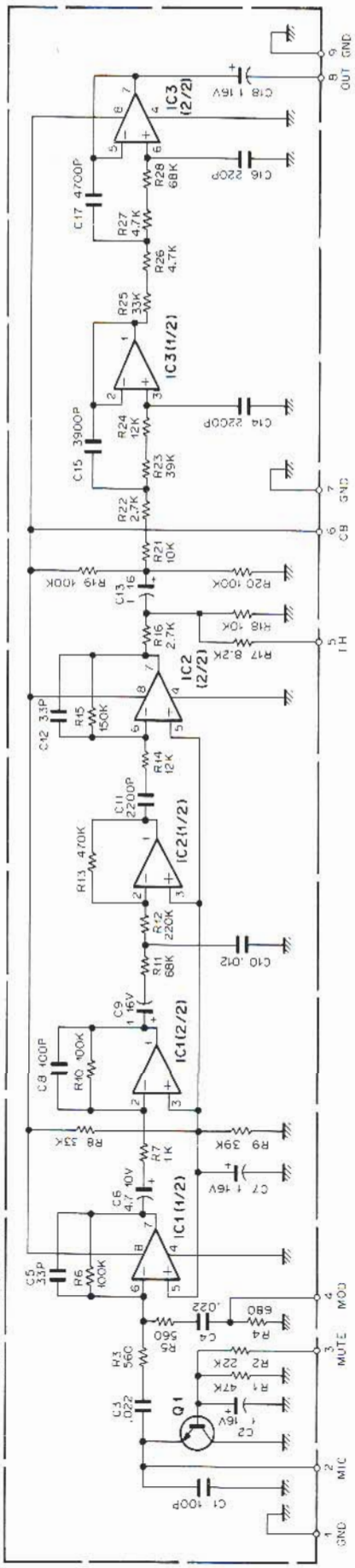

Q1 : 2SC3326(A) IC1 : NJM4560M IC2,3 : NJM4558M

Foil side view

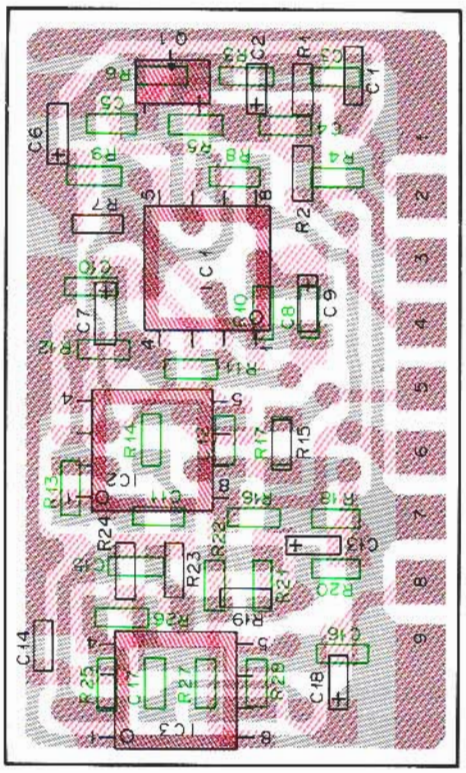

Component side view

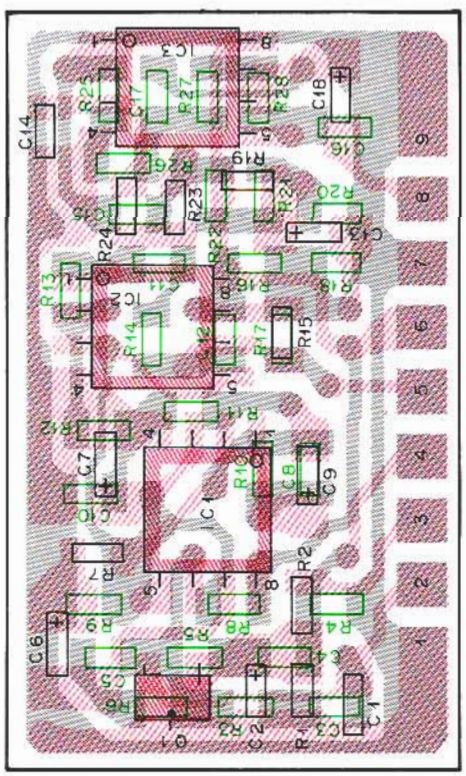

: Component side

: Foil side

IF : Z8 (X59-3220-10)

IF UNIT (X59-3220-10)

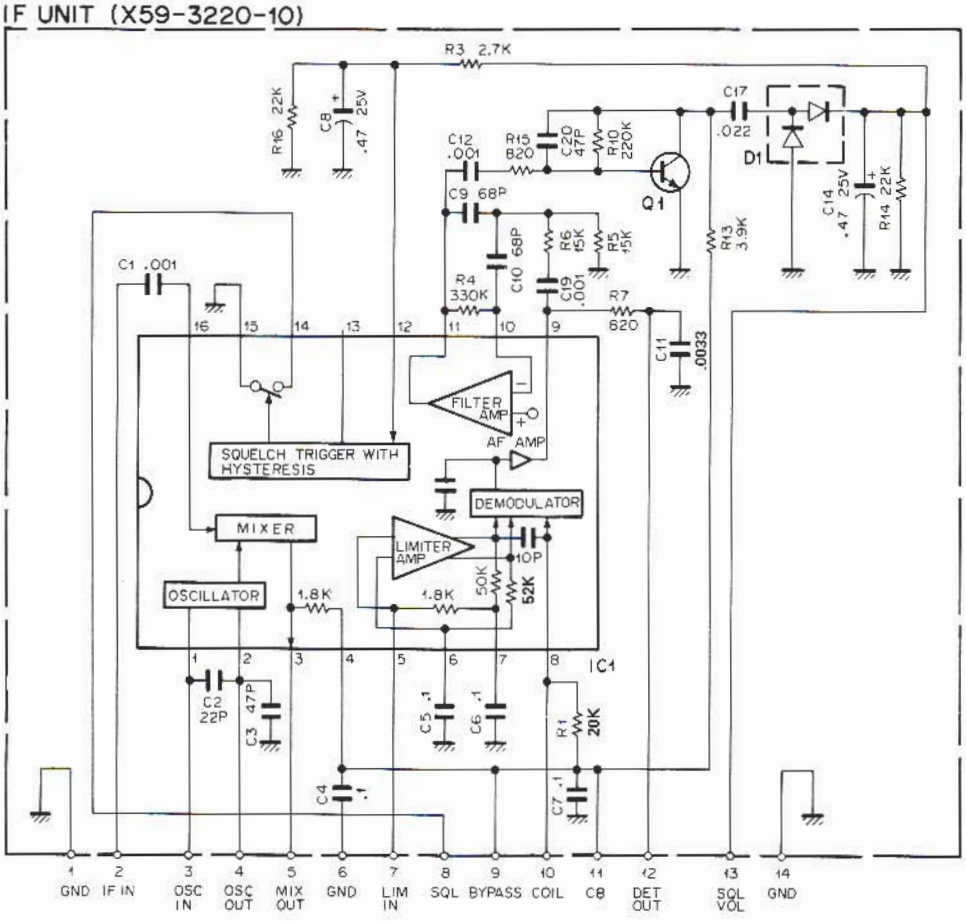

IC1 : MC3361BD
Q1 : 2SC2712 (Y)
D1 : DA204K

Component side view

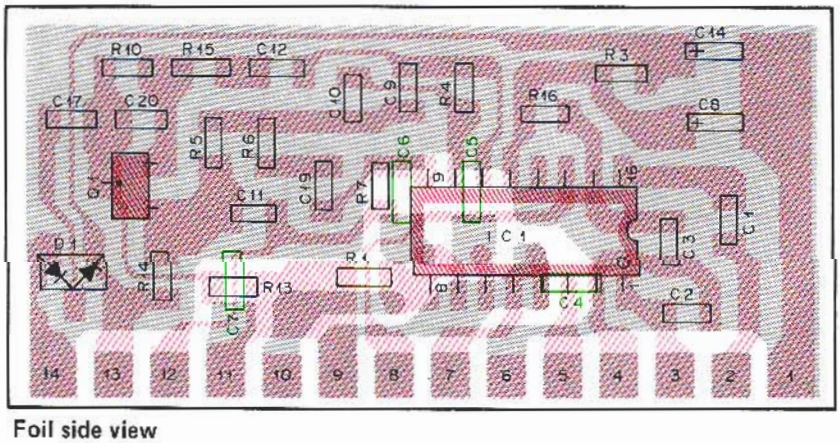

2SC2712
2SC3326

MC3361BD

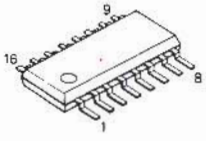

Foil side view

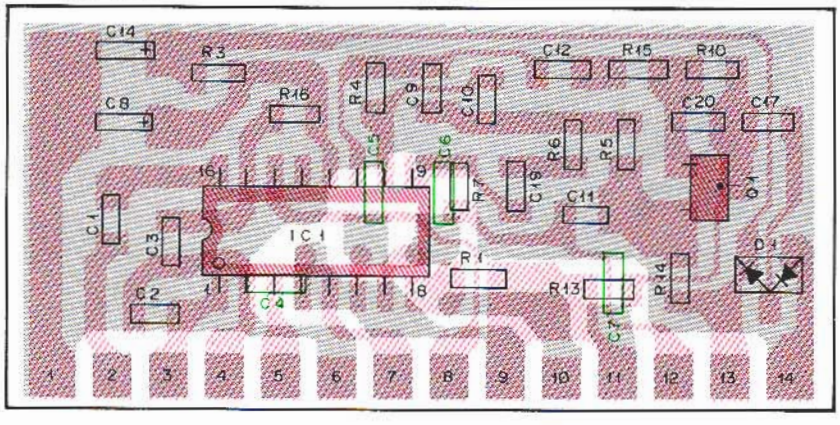

M5222FP
NJM4558M
NJM4560M

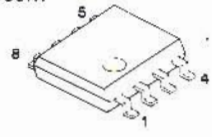

: Component side
: Foil side

PC BOARD VIEWS/CIRCUIT DIAGRAM TKR-720/N/A

BPF/VCA : Z9 (X59-3230-10)

BPF/VCA (TX-RX UNIT : Z9) (X59-3230-10)

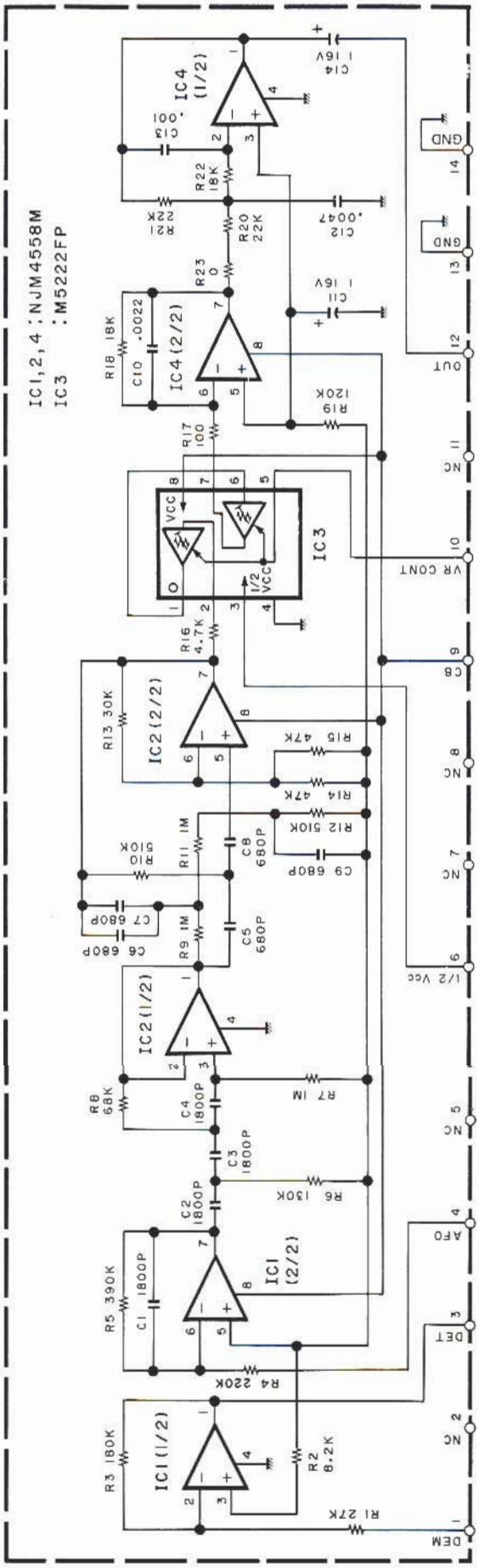

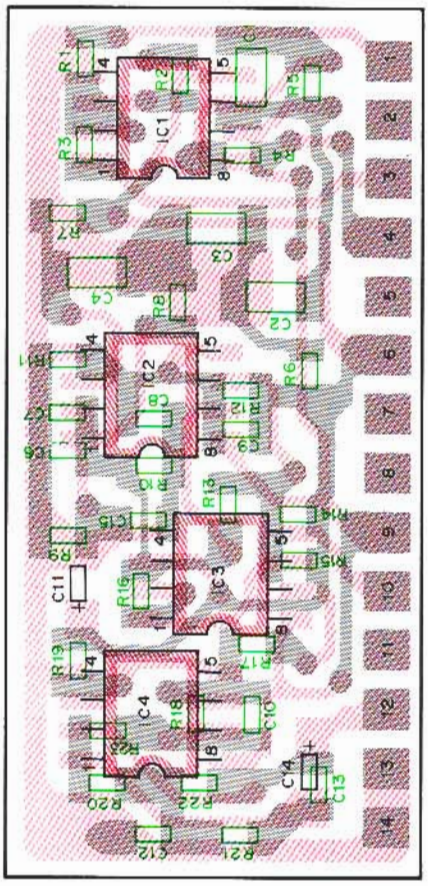

Foil side view

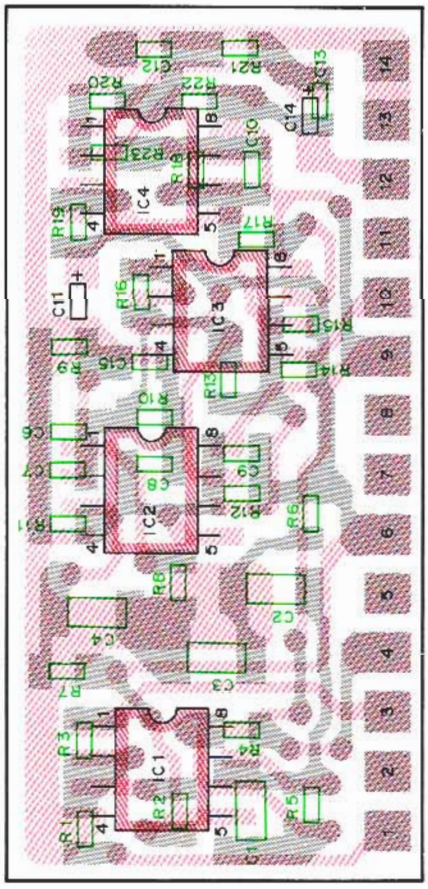

Component side view

: Component side
: Foil side

TKR-720/N/A CIRCUIT DIAGRAM

SIGNALING UNIT (X52-3140-10)

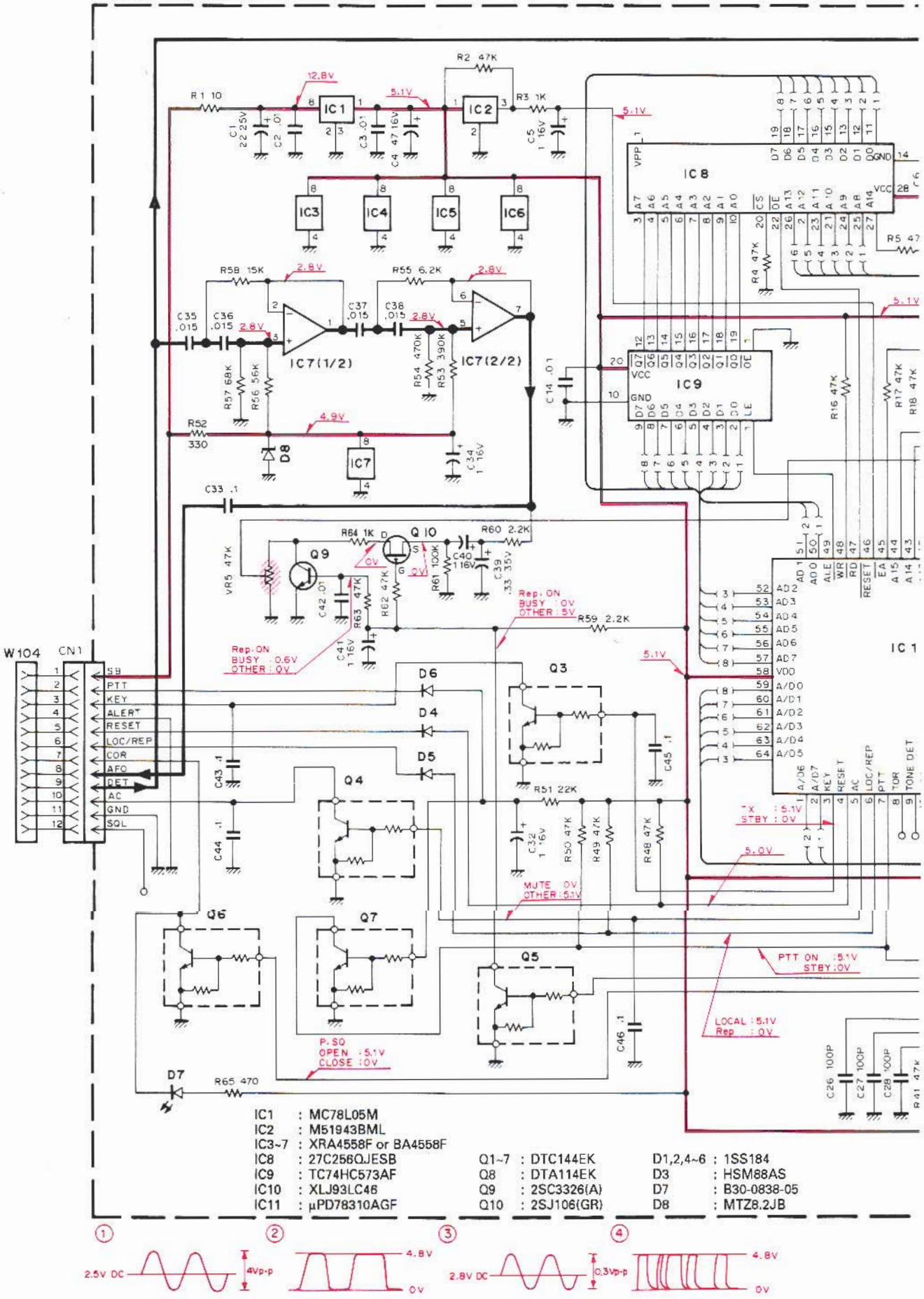

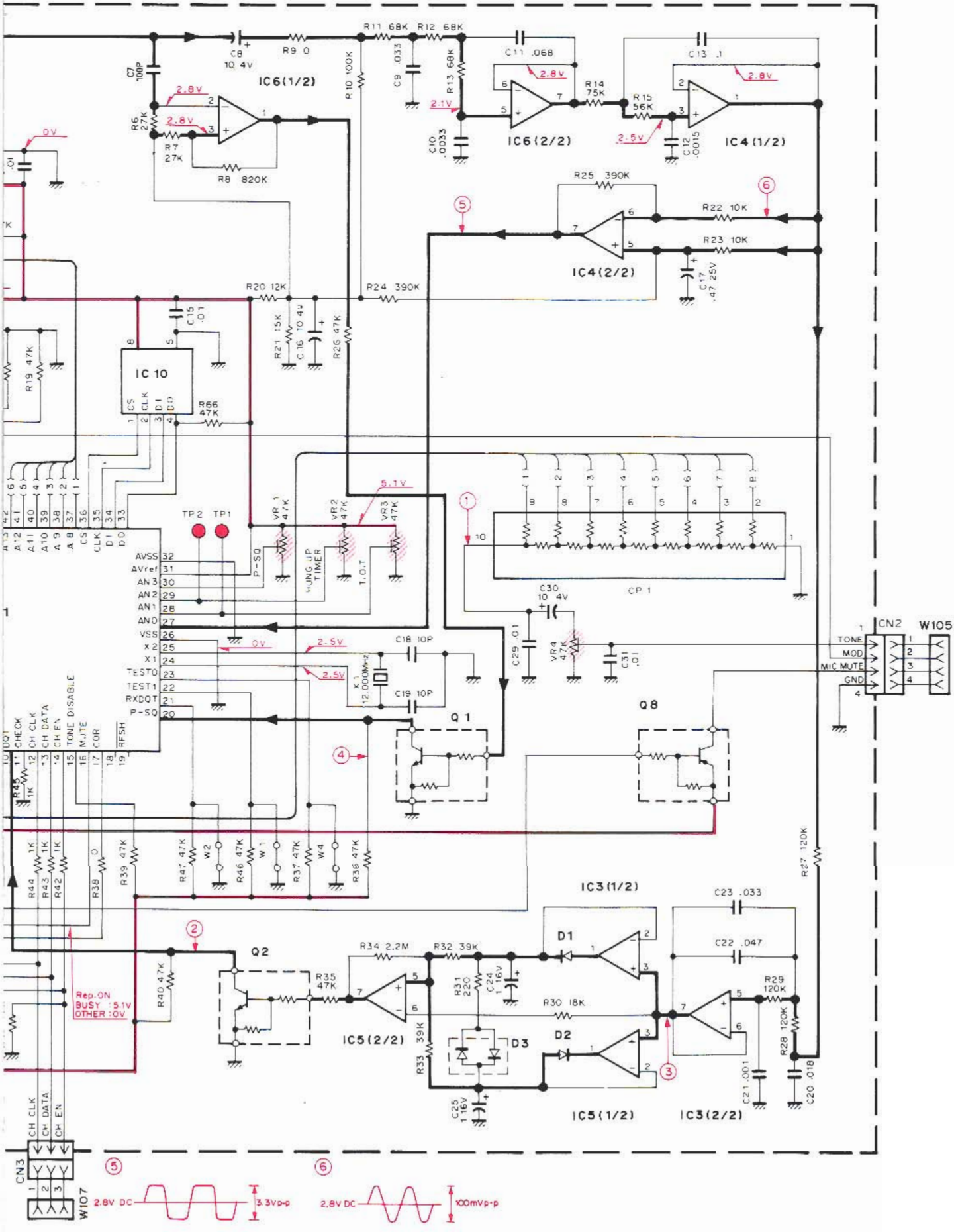
IC6(1/2)
IC6(2/2)
IC4(1/2)
IC4(2/2)
IC 10
IC3(1/2)
IC5(2/2)
IC5(1/2)
IC3(2/2)
Q1
Q2
Q8
D1
D2
D3
CP 1
CN2
W105
CN3
W107
TONE
MOD
MIC MUTE
GND
CH CLK
CH DATA
CH EN
Rep.ON
BUSY : 5.1V
OTHER : 0V
2.8V DC
3.3Vp-p
100mVp-p

SIGNALING UNIT (X52-3140-10) Component side view

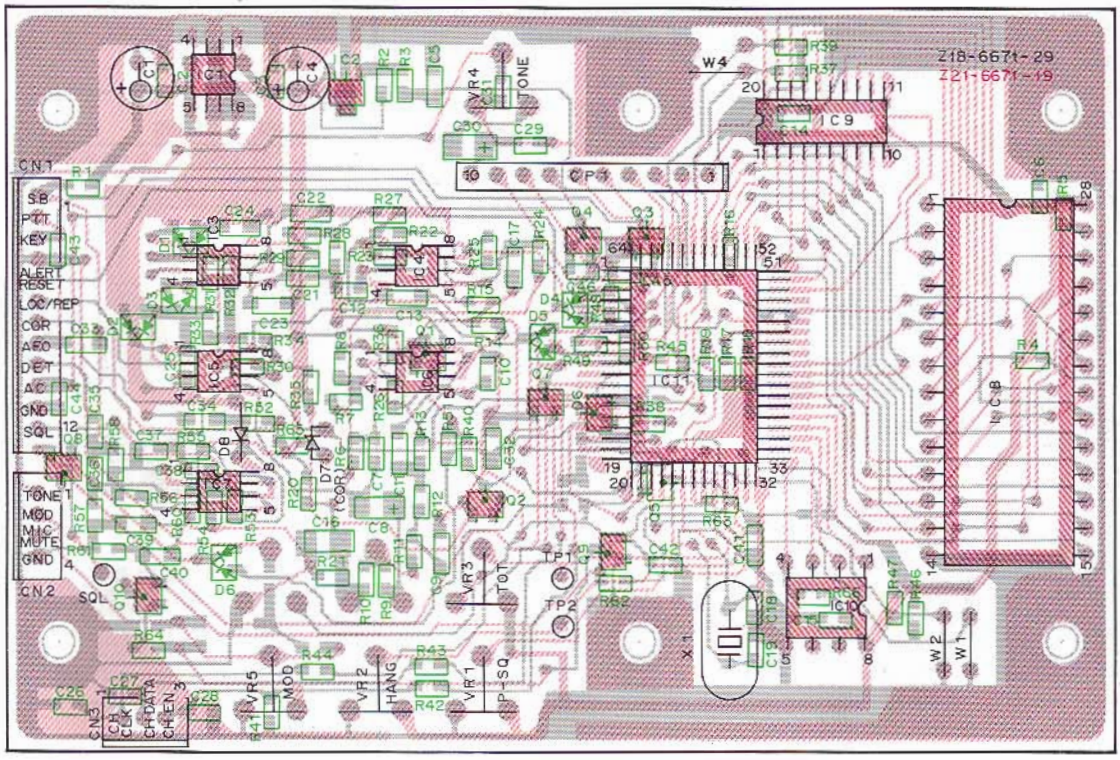

2SC3326
DTA114EK
DTC144EK

2SJ106

M51943BML

XRA4558F
MC78L05M

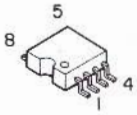

Foil side view

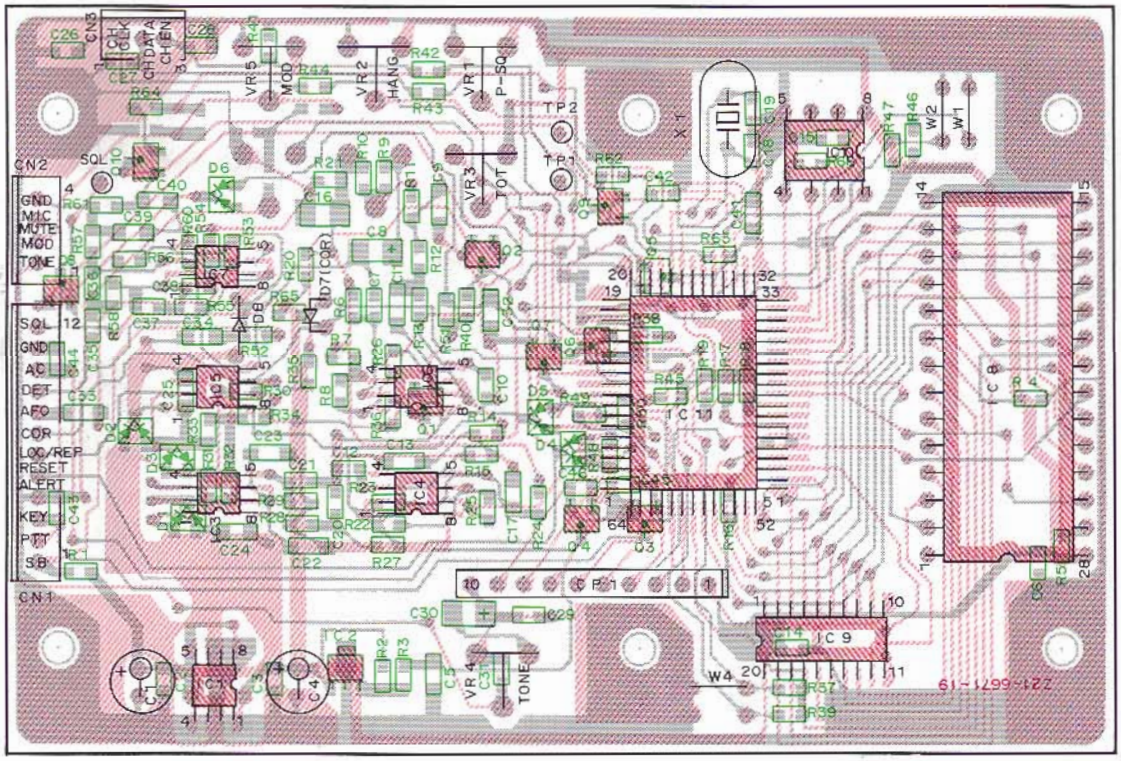

XLJ93LC46

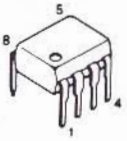

TC74HC573AF

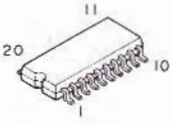

27C256QJESB

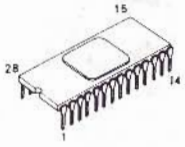

µPD78310AGF

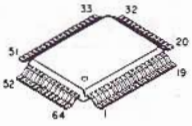

: Component side
: Foil side

TKR-720/N/A PC BOARD VIEWS

AVR UNIT (X43-3040-10) Component side view

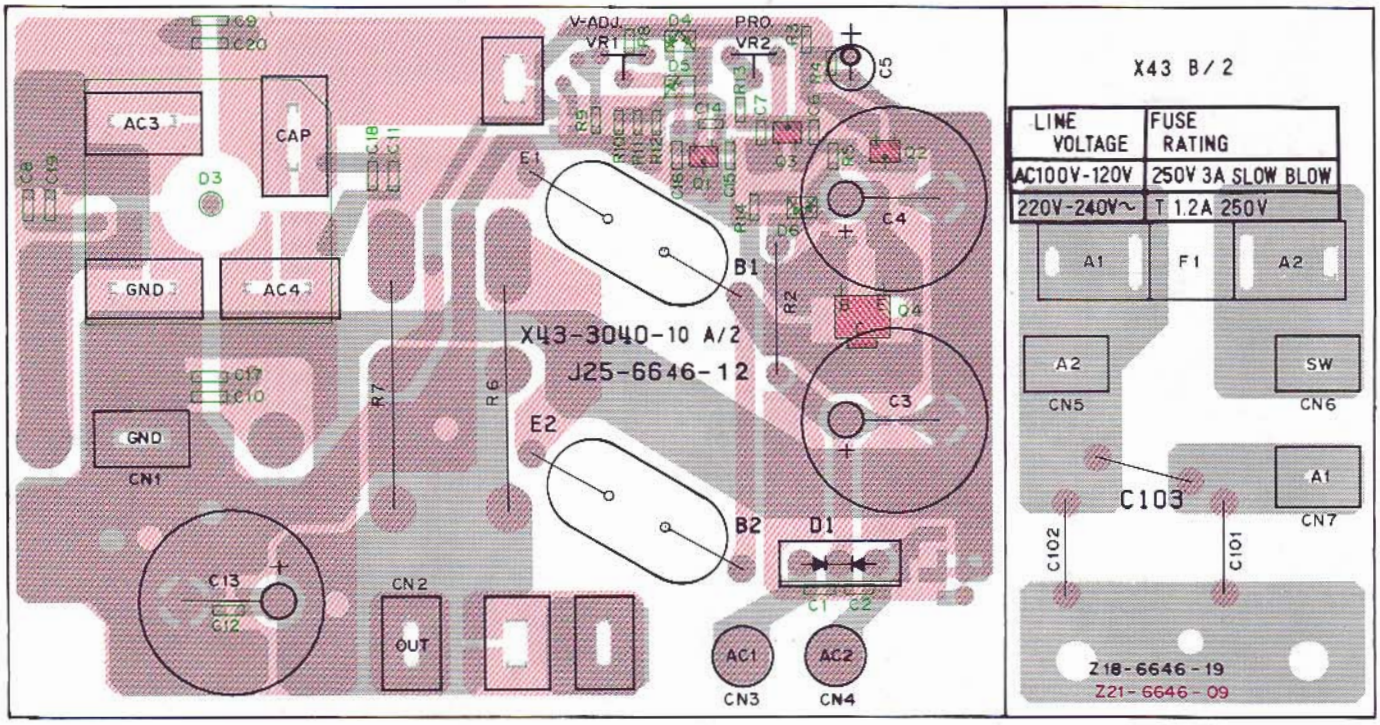

Foil side view

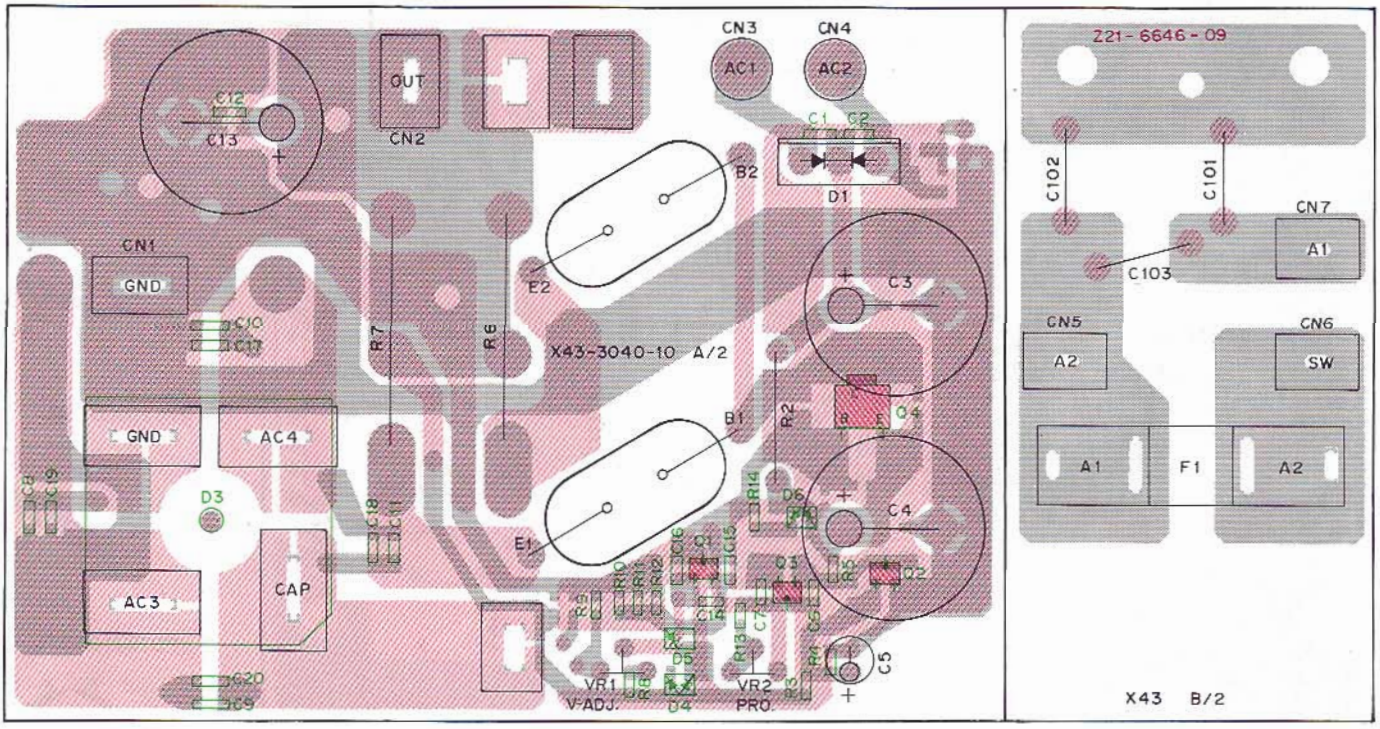

: Component side
: Foil side

2SB968

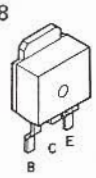

2SC2712

2N5885

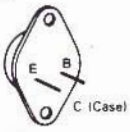

DRIVE UNIT (X45-3310-XX) Component side view

-10 : K,M,AM,NM -11 : K2,M2,AM2,NM2

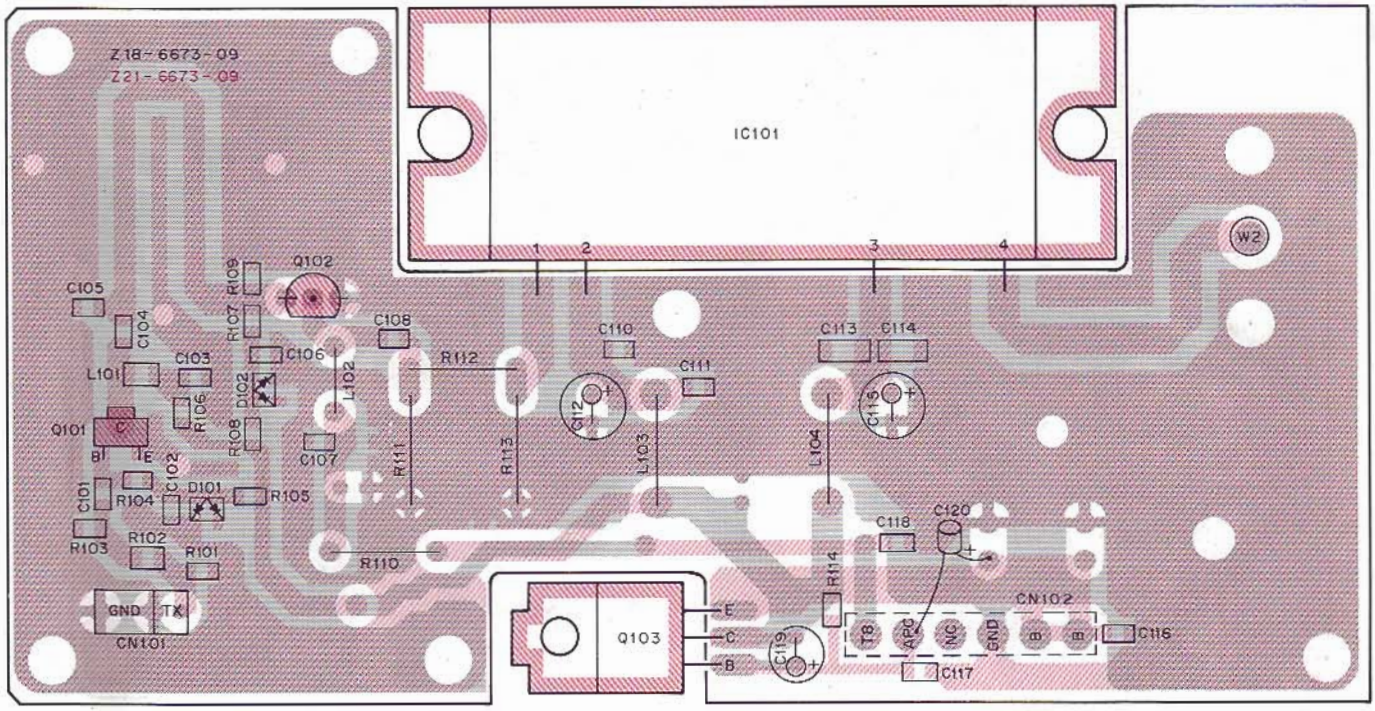

Foil side view

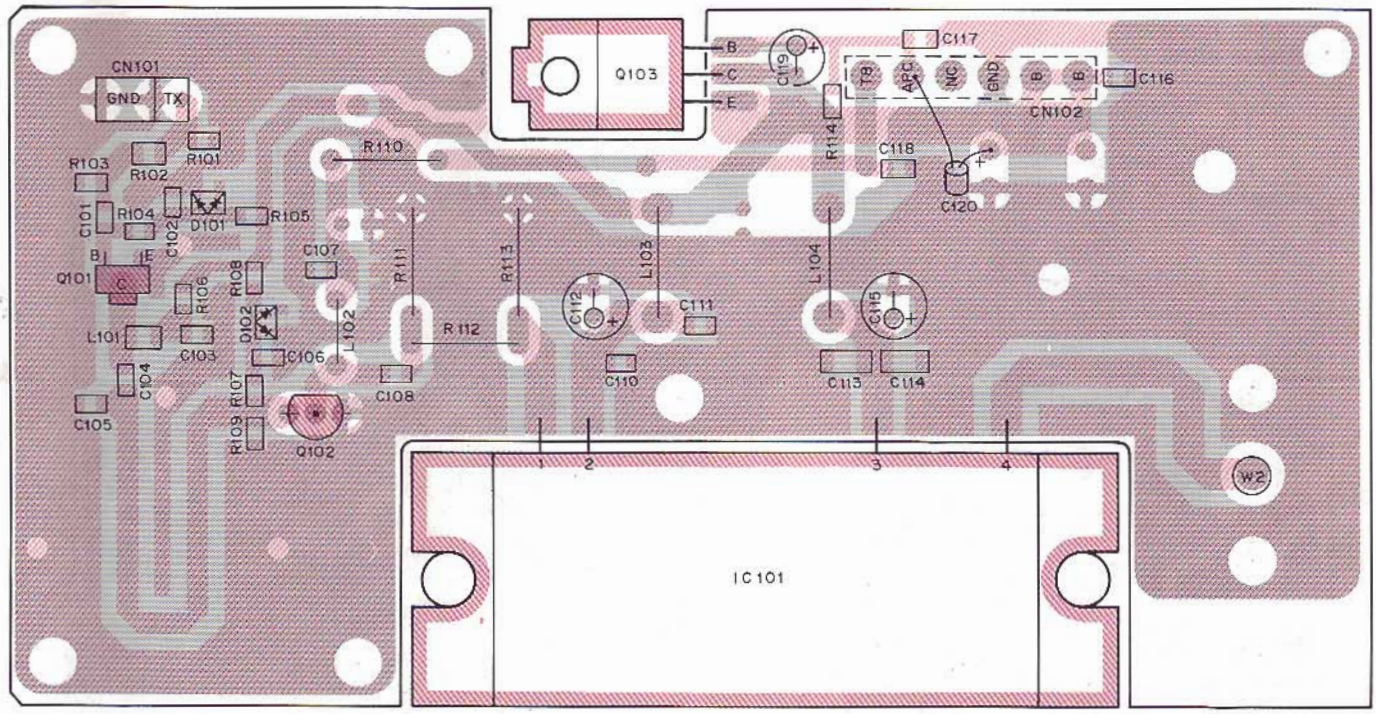

: Component side
: Foil side

2SC2538-22-A

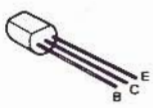

2SB951A

2SC2954

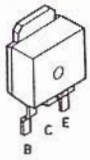

M57719
M57719L-24

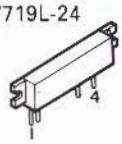

PC BOARD VIEWS

FINAL UNIT (X45-3320-XX) Component side view

-11 : K,M,AM,NM -12 : K2,M2,AM2,NM2

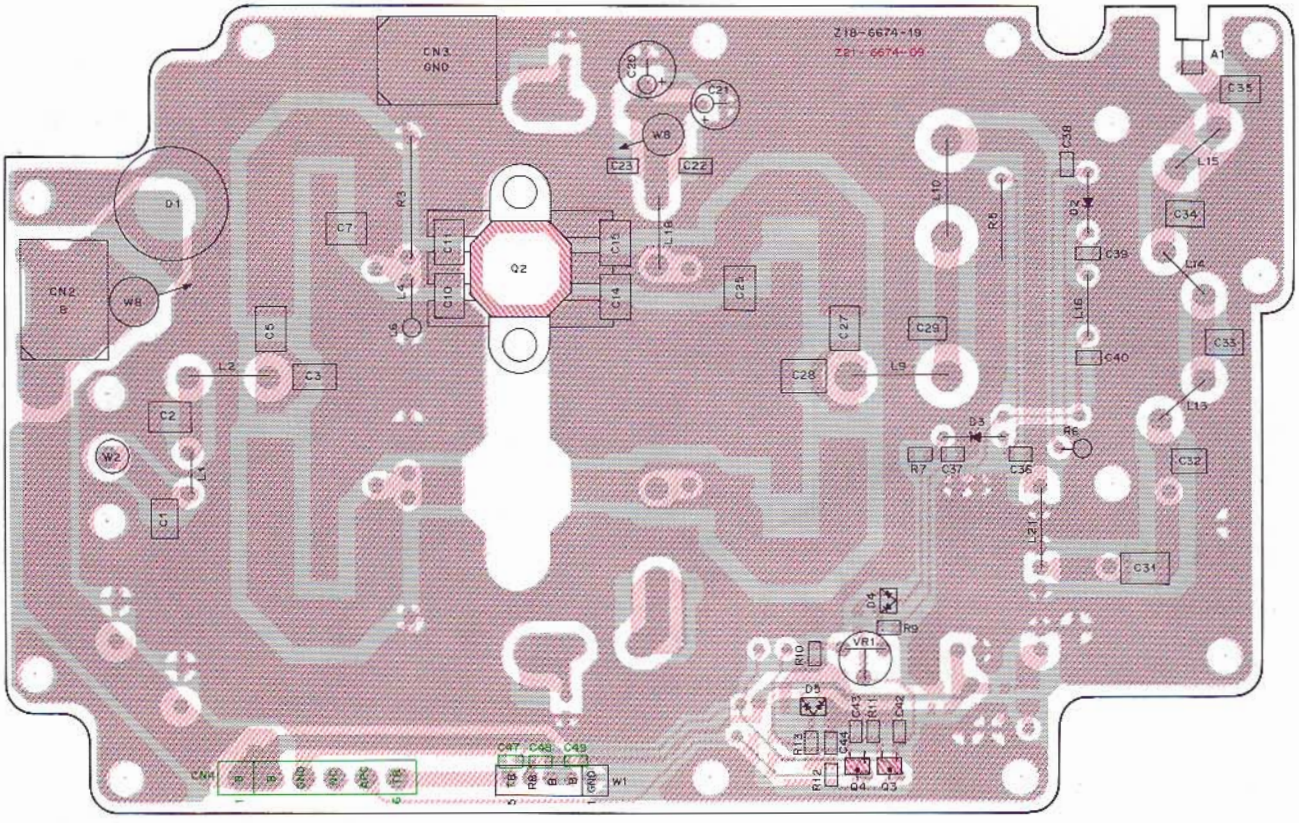

Foil side view

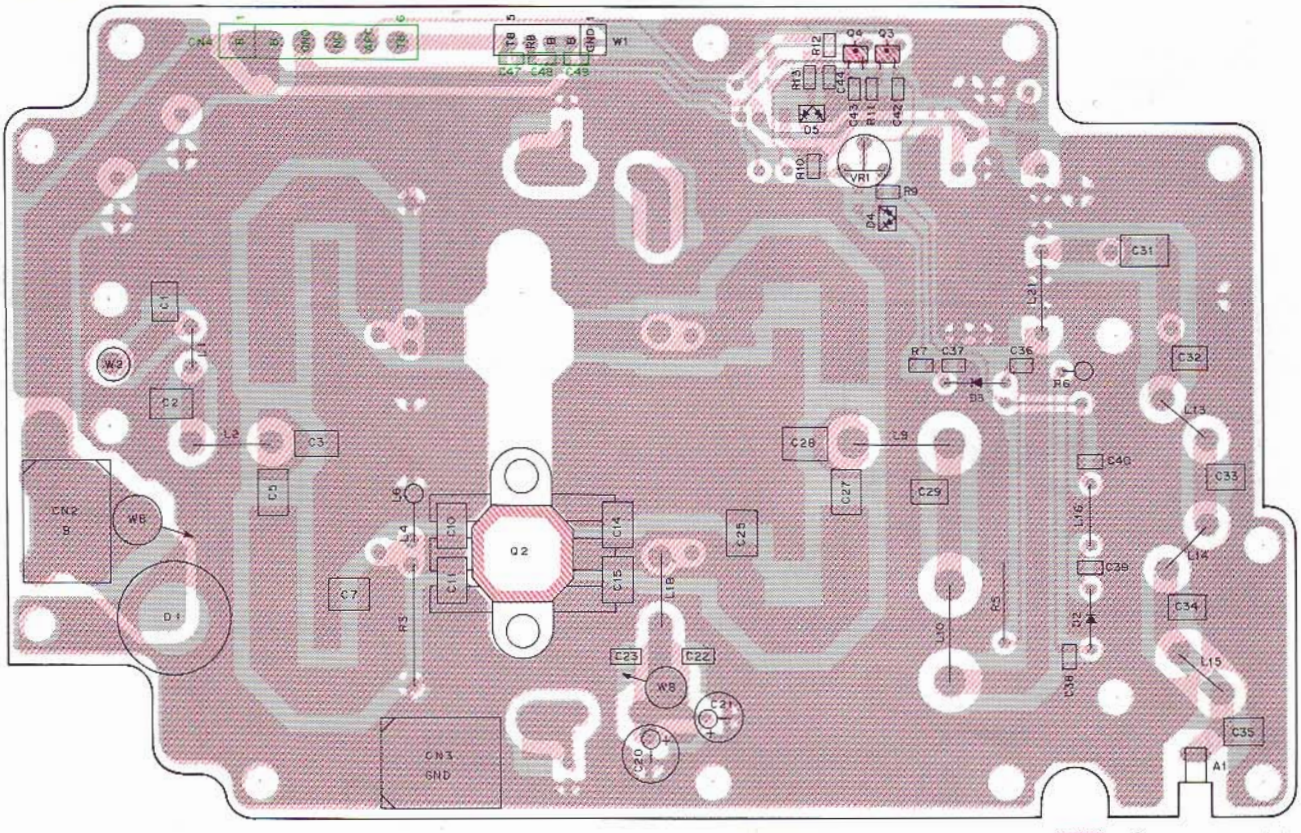

: Component side

: Foil side

DISPLAY UNIT (X54-3070-XX) Component side view
-12 : K,K2,M,M2,NM,NM2 -14 : AM,AM2

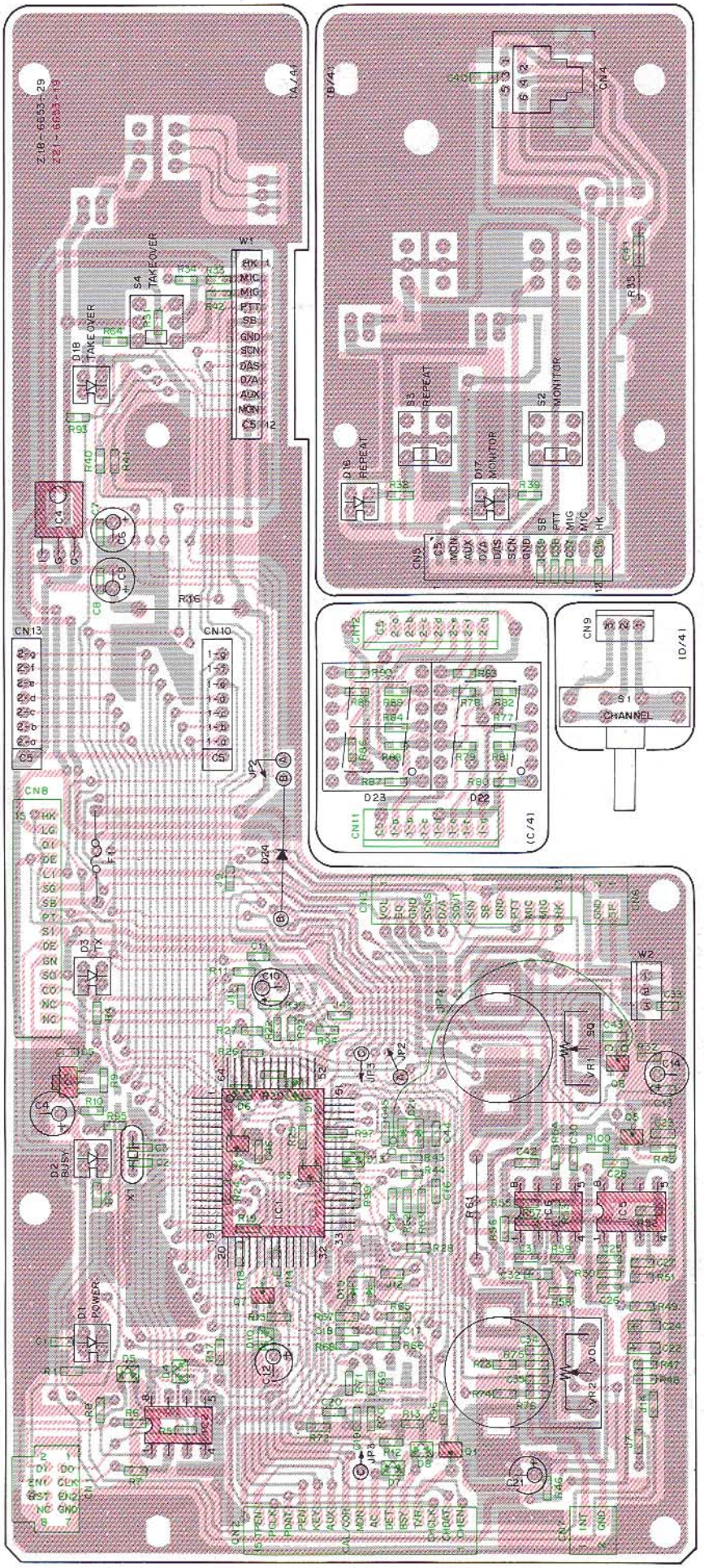

PC BOARD VIEWS TKR-720/N/A

Foil side view

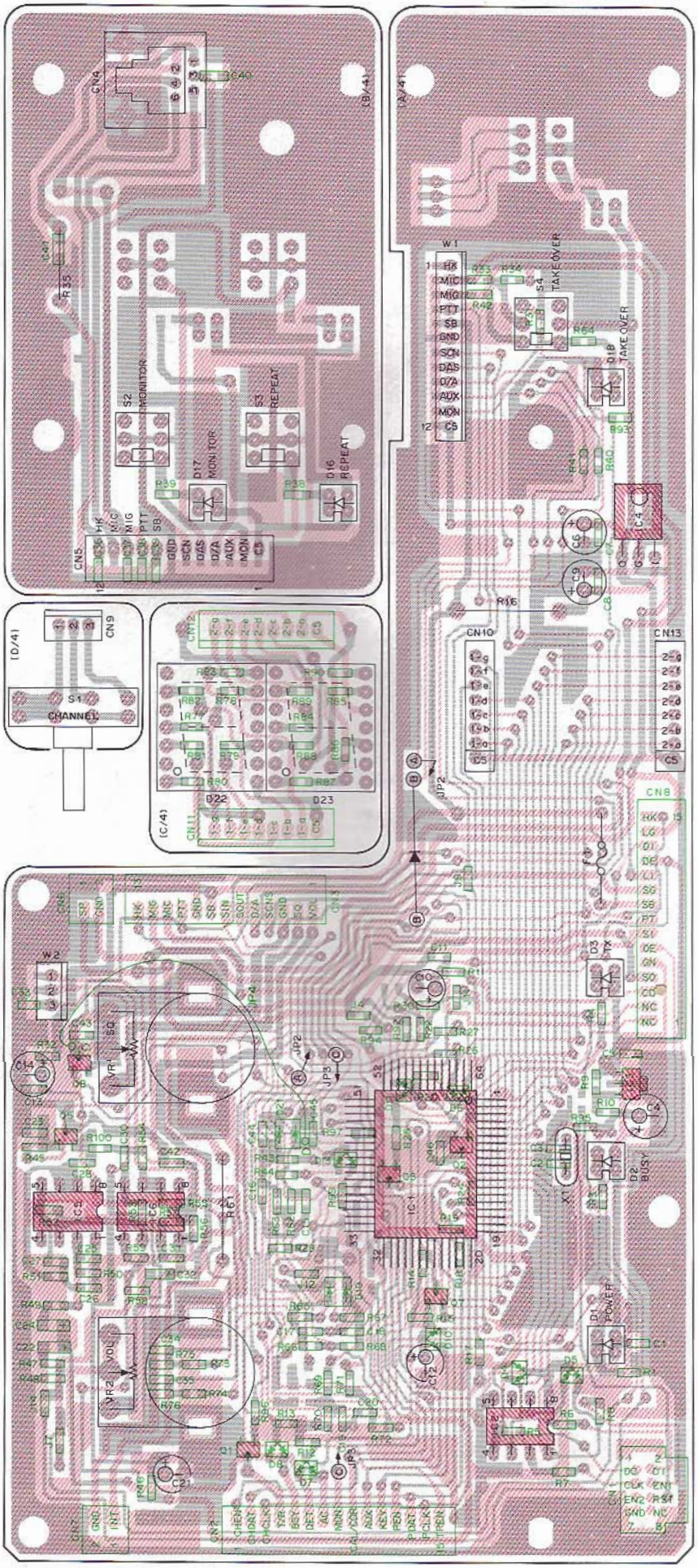

2SA1162
2SC3326
DTC114EK

AN78N05

M51943BML

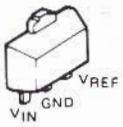

XLJ93LC46

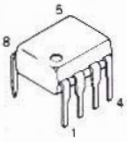

µPC4558C

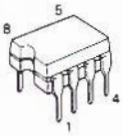

75104G-604-1B

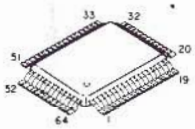

2SC2694

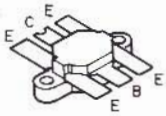

: Component side
: Foil side

TKR-720/N/A PC BOARD VIEWS

TX-RX UNIT (X57-3760-XX) Component side view
-10 : K,M,AM -11 : K2,M2,AM2 -12 : NM -13 : NM2

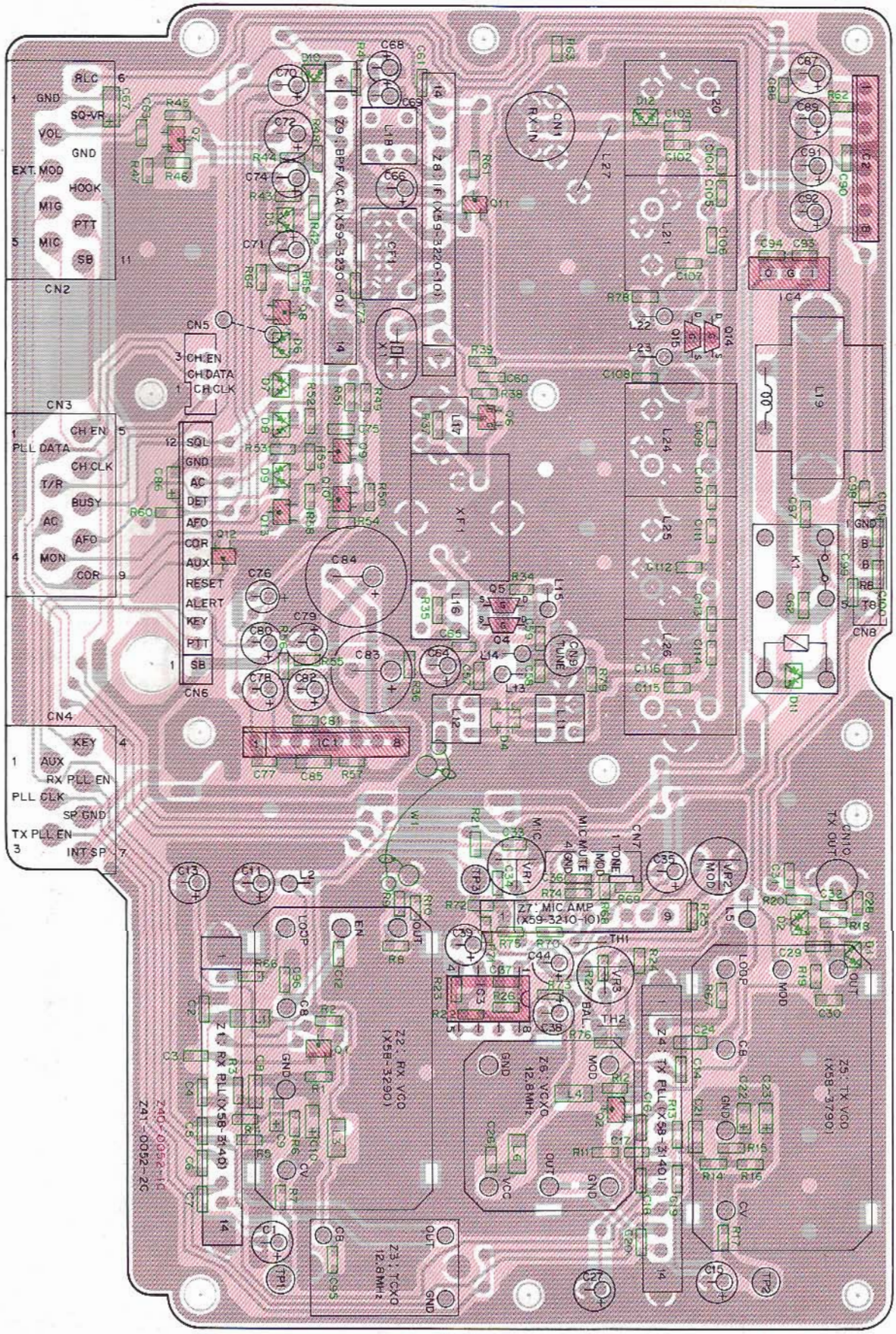

Foil side view

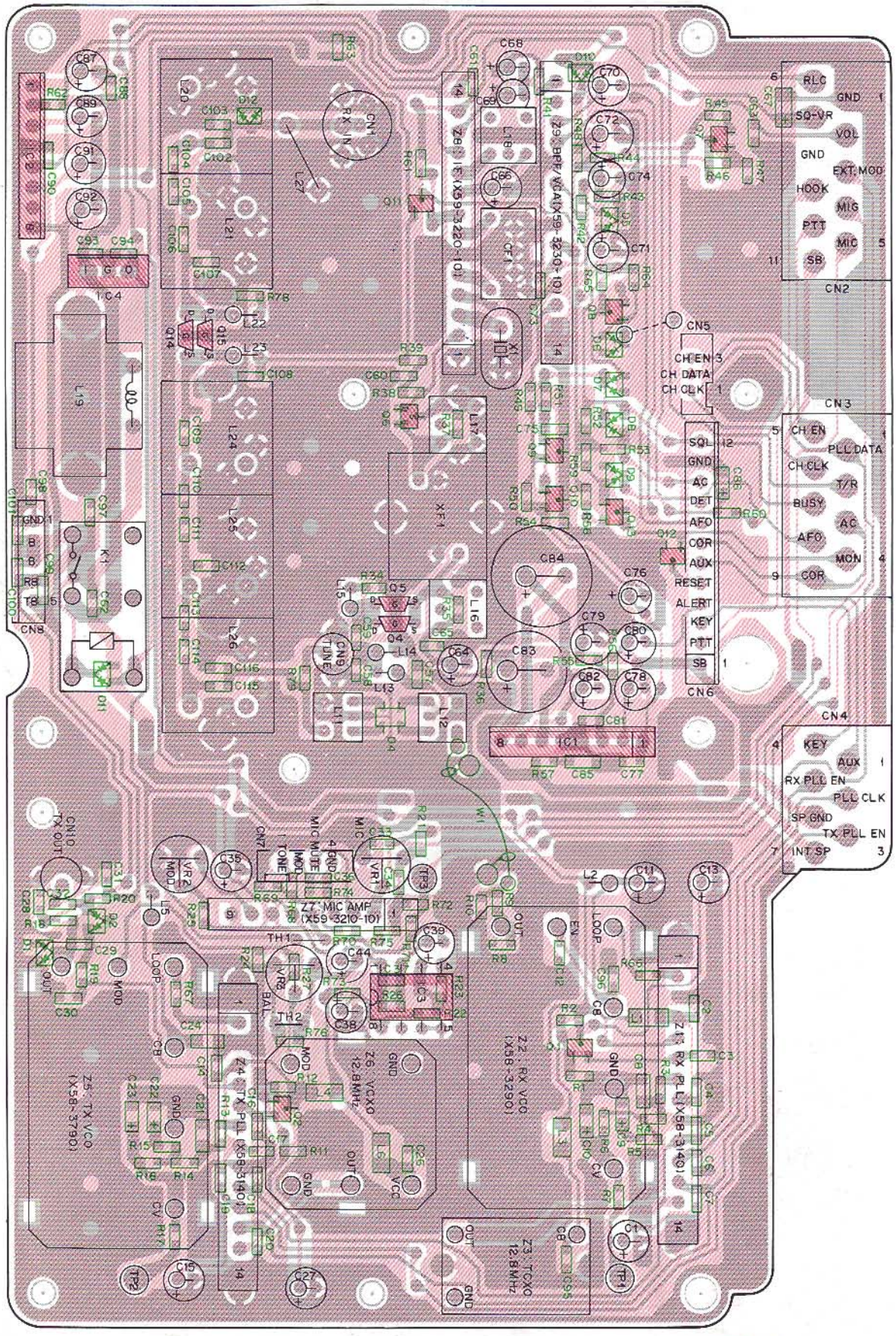

2SC2712
2SC3326
DTC114EK

L78N08

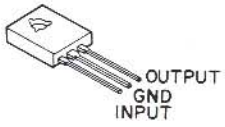

2SK302

NJM4558D

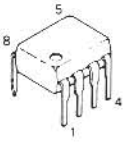

MB3756
μPC1242H

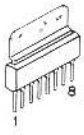

2SK125

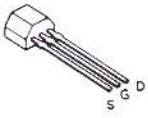

: Component side
: Foil side

SCHEMATIC DIAGRAM TKR-720/N/A

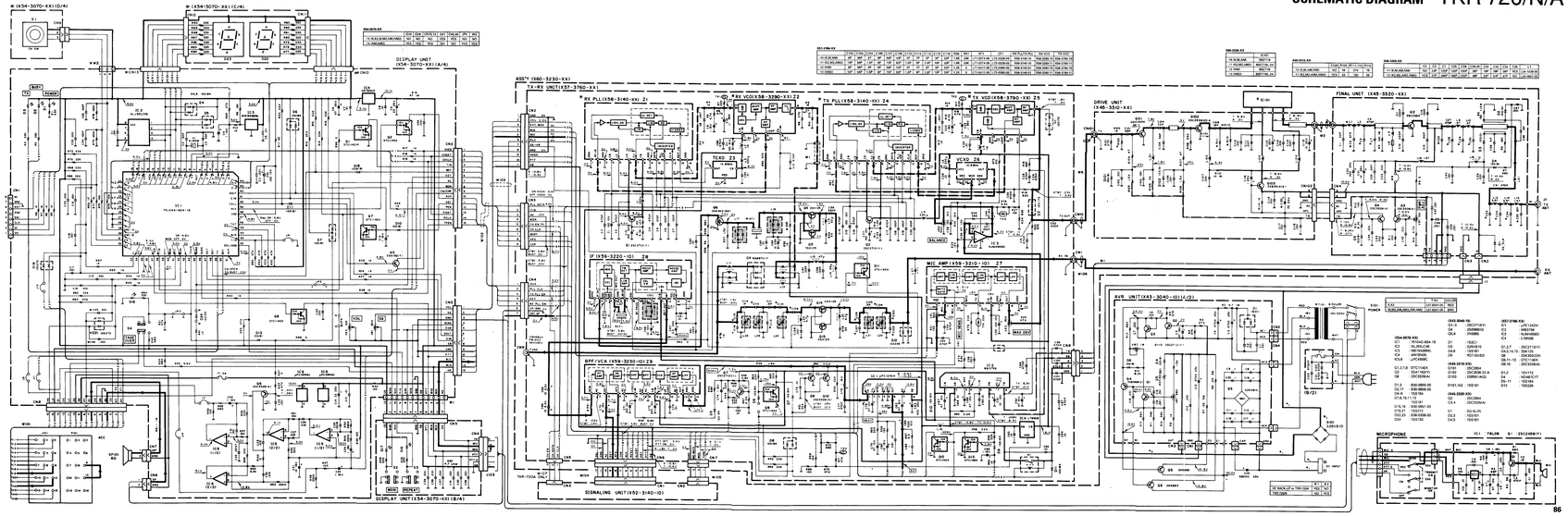

PC BOARD VIEWS/CIRCUIT DIAGRAM TKR-720/N/A

RX PLL : Z1, TX PLL : Z4 (X58-3140-XX) -10 : K,M,AM,K2,M2,AM2 -51 : NM,NM2

RX PLL, TX PLL (X58-3140-XX)

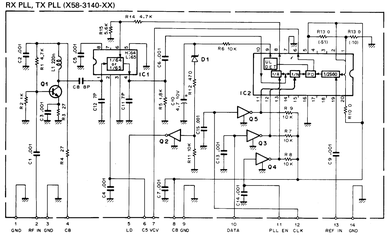

Q1 : 2SC2714(Y)
Q2~5 : DTC114EK
IC1 : M58504F
IC2 : JLC1075F or JLC1075DW
D1 : RD3.0M(B2)

Component side view

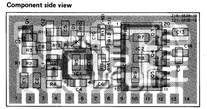

Foil side view

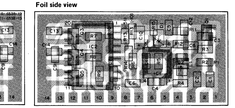

: Component side
: Foil side

PC BOARD VIEWS/CIRCUIT DIAGRAM TKR-720/N/A

TX VCO : Z5 (X58-3790-XX) -10 : K,M,NM,AM -11 : K2,M2,NM2,AM2

TX VCO (X58-3790-XX)

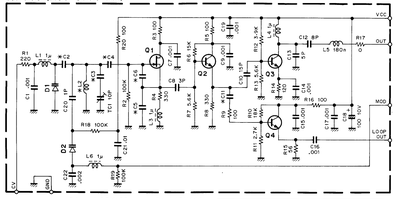

Q1 : 2SK125
Q2 : 2SC2714(Y)
Q3,4 : 2SC3356
D1 : 1SV166
D2 : 1SV164

	C2	C3	C4	C5	C6	C11	L2
-10	18P	56P	9P	4P	6P	1P	L34-2309-05
-11	15P	47P	12P	6P	10P	3P	L32-0658-05

Component side view

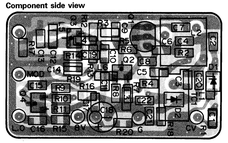

Foil side view

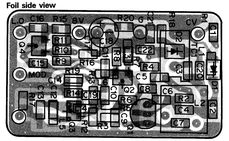

: Component side
: Foil side

TKR-720/N/A CIRCUIT DIAGRAM

SIGNALING UNIT (X52-3140-10)

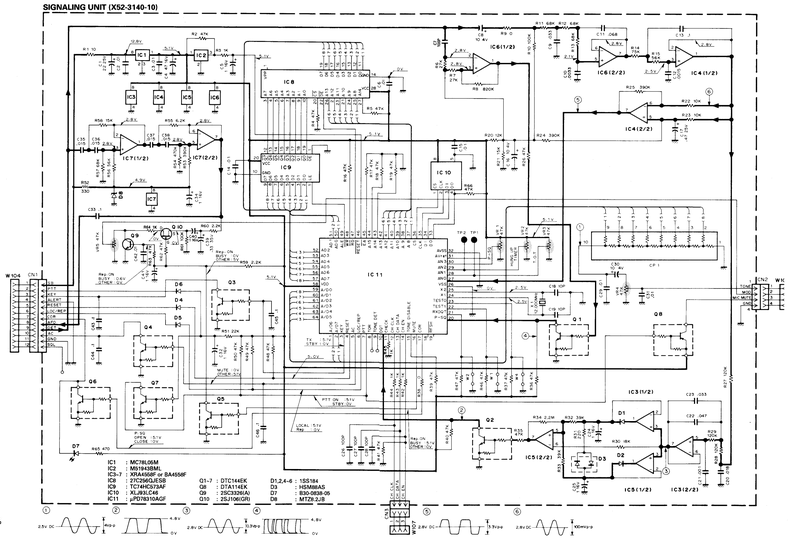

IC1 : MC78L05M
IC3 : M51953BSL
IC5~7 : XRA4558F or SA4558F
IC8 : 27C256(JE53B
IC9 : TC74HC93AF
IC10 : KLJ83LC46
IC11 : μPD78310GAF
Q1~7 : DTC114EK
Q8 : DTA114EK
Q9 : 2SC3326(A)
Q10 : 2SJ106(GR)
D1,2,4~6 : 1SS184
D3 : HSM88AS
D7 : 850-3026-05
D8 : MTZ6.2JB

PC BOARD VIEWS/CIRCUIT DIAGRAM TKR-720/N/A

IF : Z8 (X59-3220-10)

IF UNIT (X59-3220-10)

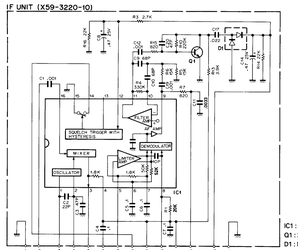

IC1 : MC3361BD
Q1 : 2SC2712 (Y)
D1 : DA204K

Component side view

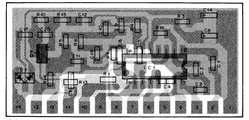

Foil side view

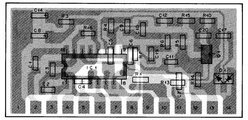

2SC2712
2SC3326

MC3361BD

M52220P
NJM4558M
NJM4560M

: Component side
: Foil side

BPF/VCA : Z9 (X59-3230-10)

BPF/VCA (TX-RX UNIT : Z9) (X59-3230-10)

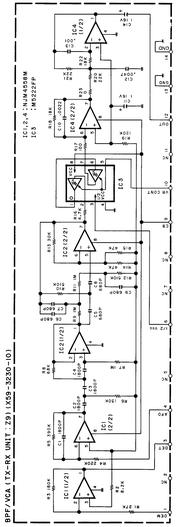

Foil side view

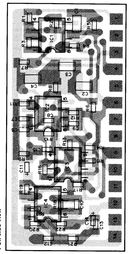

Component side view

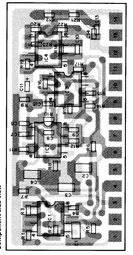

: Component side
: Foil side

TKR-720/N/A PC BOARD VIEWS/CIRCUIT DIAGRAM

RX VCO : Z2 (X58-3290-XX) -10 : K,M,NM,AM -11 : K2,M2,NM2,AM2

RX VCO (X58-3290-XX)

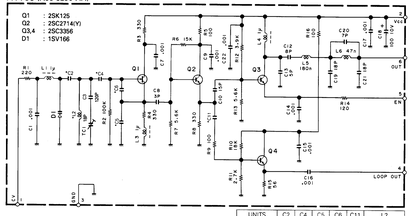

Q1 : 2SK125
Q2 : 2SC2714(Y)
Q3,4 : 2SC3356
D1 : 1SV166

UNITS	C2	C4	C5	C6	C11	L2
X58-3290-10	27P	15P	6P	10P	1P	L34-2309-05
X58-3290-11	22P	18P	9P	15P	3P	L32-0658-05

Component side view

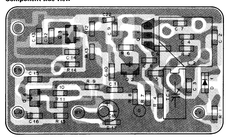

2SK125

2SC2714
2SC3356

Foil side view

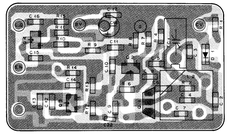

: Component side
: Foil side

TKR-720/N/A PC BOARD VIEWS/CIRCUIT DIAGRAM

MIC AMP : Z7 (X59-3210-10)

MIC AMP UNIT (X59-3210-10)

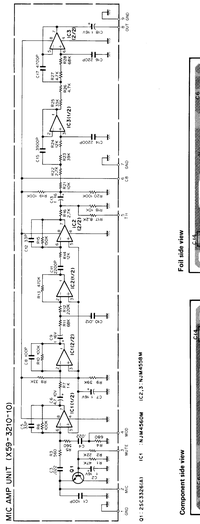

Foil side view

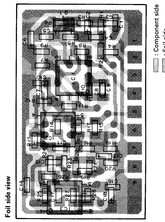

Component side view

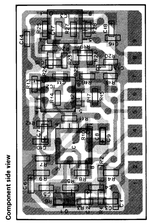

: Component side
: Foil side

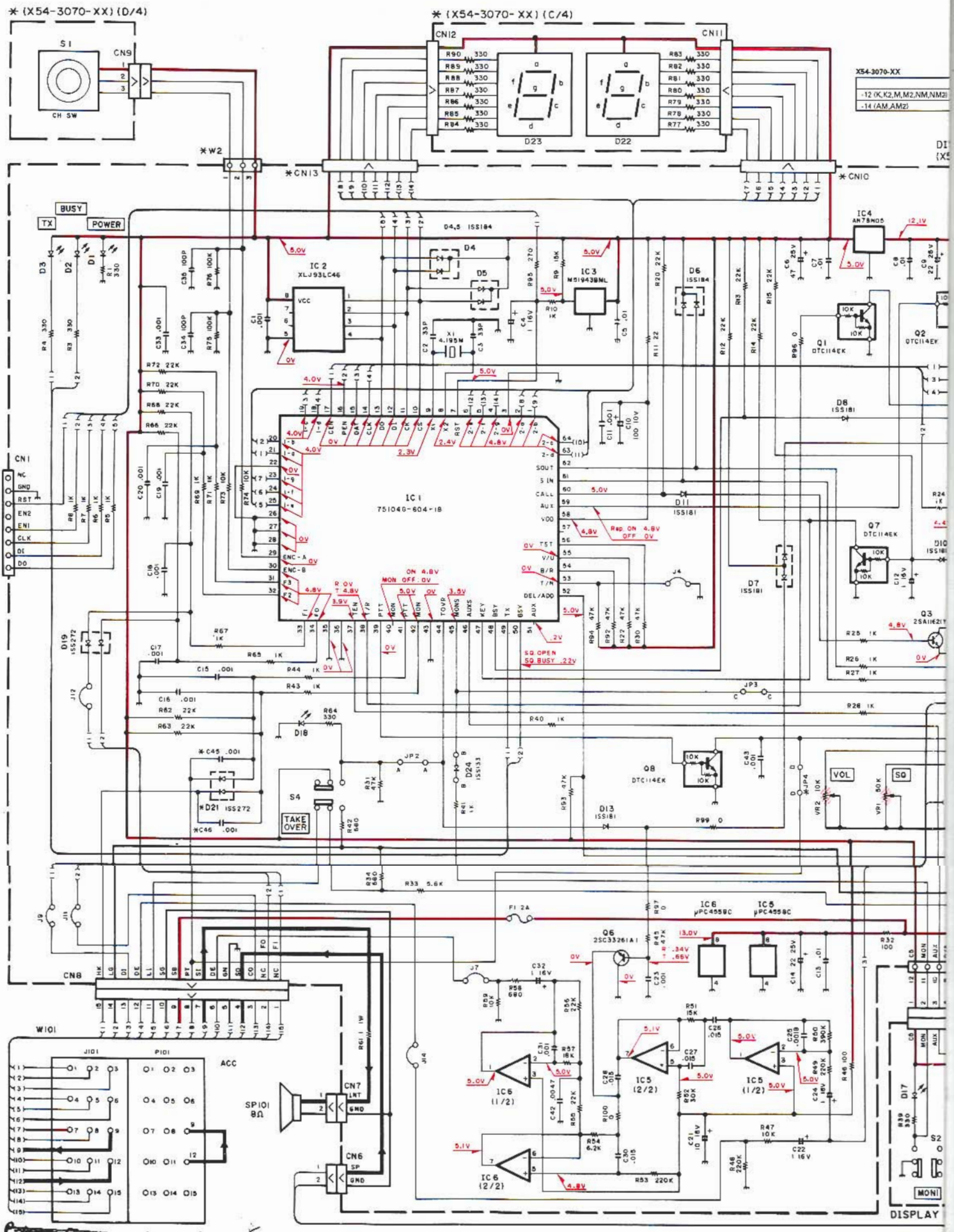
* (X54-3070-XX) (D/4)
* (X54-3070-XX) (C/4)
X54-3070-XX
-12 (K,K2,M,M2,NM,NM2)
-14 (AM,AM2)
S1
CH SW
CN9
CN12
CN11
D23
D22
*W2
*CN13
*CN10
BUSY
TX
POWER
IC 2
XLJ93LC46
IC 3
M51943BML
IC4
AN78M05
IC1
751046-604-18
CN1
NC
GND
RST
EN2
EN1
CLK
DI
DO
CN8
W101
J101
P101
ACC
SP101
8Ω
CN7
CN6
S4
TAKE OVER
VOL
SQ
MONI
DISPLAY
IC6
μPC4558C
IC5
μPC4558C
Q6
2SC3326(A)
Q8
DTC114EK
Q7
DTC114EK
Q1
DTC114EK
Q2
DTC114EK
Q3
2SA1162Y
D4,5 1SS184
D6
1SS184
D8
1SS181
D11
1SS181
D7
1SS181
D13
1SS181
D18
D19
1SS272
*D21
1SS272
D24
1SS133
S2
F1 2A
(P101) = 809-1571-05
no LCXH-

(C/4)	(D/4)	CN10,13	D21	C45,46	JP4	W2
NO	NO	NO	YES	YES	NO	NO
YES	YES	YES	NO	NO	YES	YES

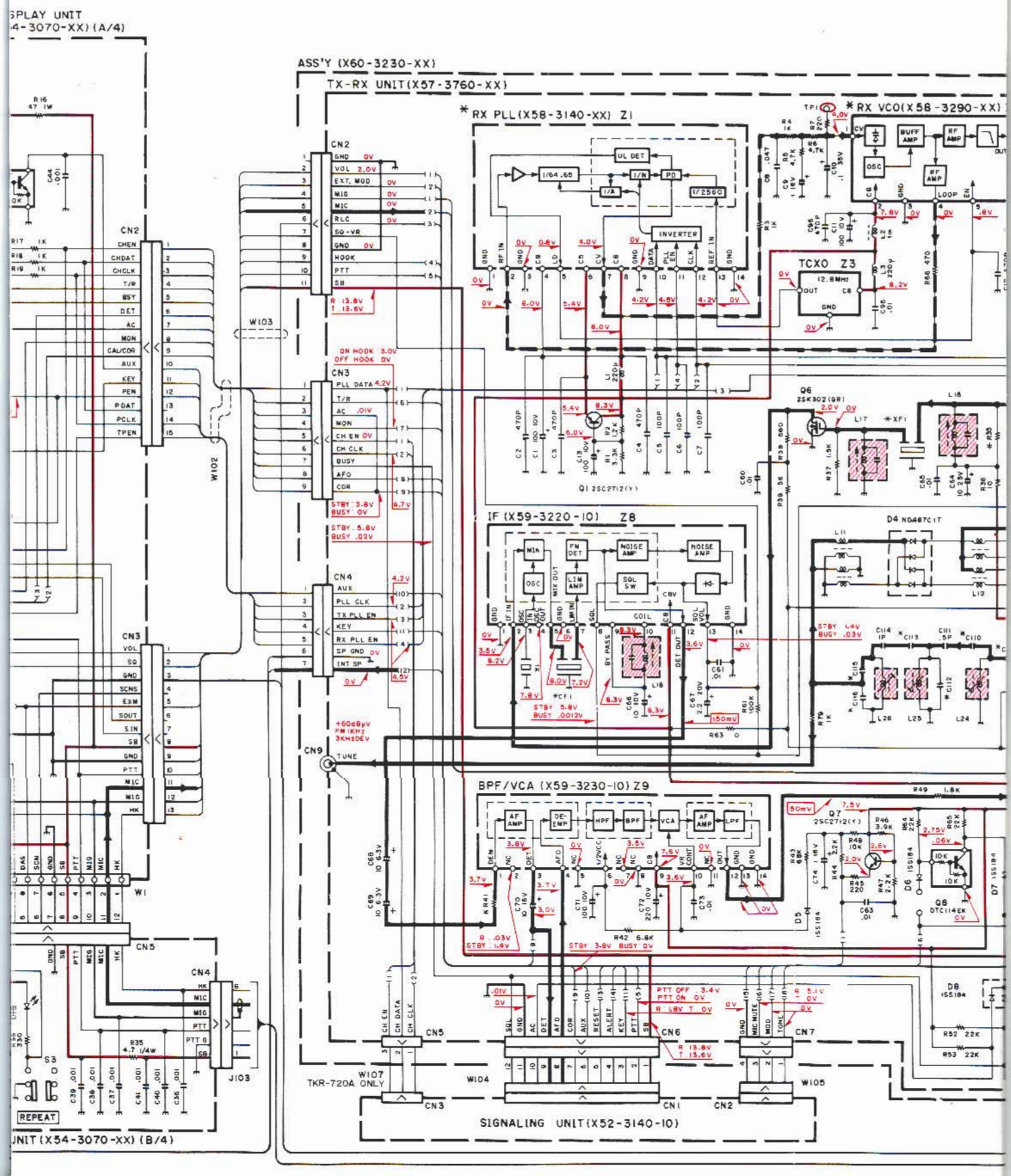

K L M N O

X57-3760-XX

	C102	C103	C104	C106	C107	C109	C110	C112	C113	C115	C116	R35	R41	XF1	CF1	RX PLL/TX PLL	RX VCO	TX VCO
-10 (K,M,AM)	8P	39P	2P	8P	56P	43P	2P	7P	2P	9P	22P	1.8K	33K	L71-0274-05	L72-0339-05	X58-3140-10	X58-3290-10	X58-3790-10
-11 (K2,M2,AM2)	10P	56P	1.5P	9P	75P	82P	1.5P	9P	1.5P	10P	33P	1.8K	33K	L71-0274-05	L72-0339-05	X58-3140-10	X58-3290-11	X58-3790-11
-12 (NM)	8P	39P	2P	8P	56P	43P	2P	7P	2P	9P	22P	1.2K	0	L71-0417-05	L72-0360-05	X58-3140-51	X58-3290-10	X58-3790-10
-13 (NM2)	10P	56P	1.5P	9P	75P	82P	1.5P	9P	1.5P	10P	33P	1.2K	0	L71-0417-05	L72-0360-05	X58-3140-51	X58-3290-11	X58-3790-11

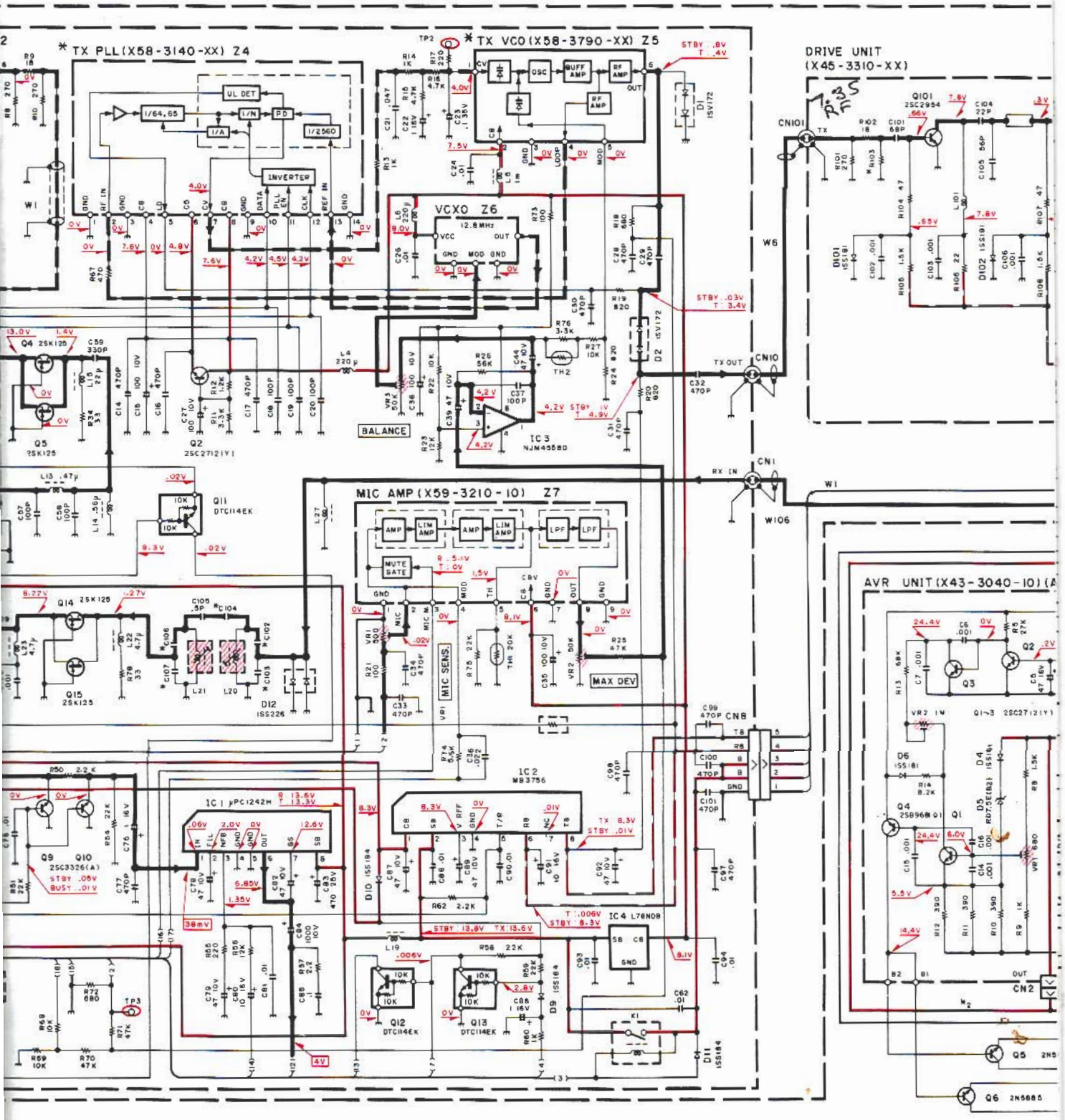

SCHEMATIC DIAGRAM TKR-720/N/A

X60-3230-XX

	IC101
-10 (K,M,AM)	M57719
-11 (K2,M2,AM2)	M57719L-24
-12 (NM)	M57719
-13 (NM2)	M57719L-24

X45-3310-XX

	C120	R103	R111,113	R112
-10 (K,M,AM,NM)	NO	18	270	18
-11 (K2,M2,AM2,NM2)	YES	33	150	39

X45-3320-XX

	C2	C3	C7	C25	C28	C29,30	C32	C33	C34	C35	L1
-11 (K,M,AM,NM)	NO	24P	120P	120P	100P	36P	18P	39P	39P	YES	L34-1039-05
-12 (K2,M2,AM2,NM2)	YES	27P	180P	160P	120P	39P	22P	51P	47P	NO	L34-0951-05

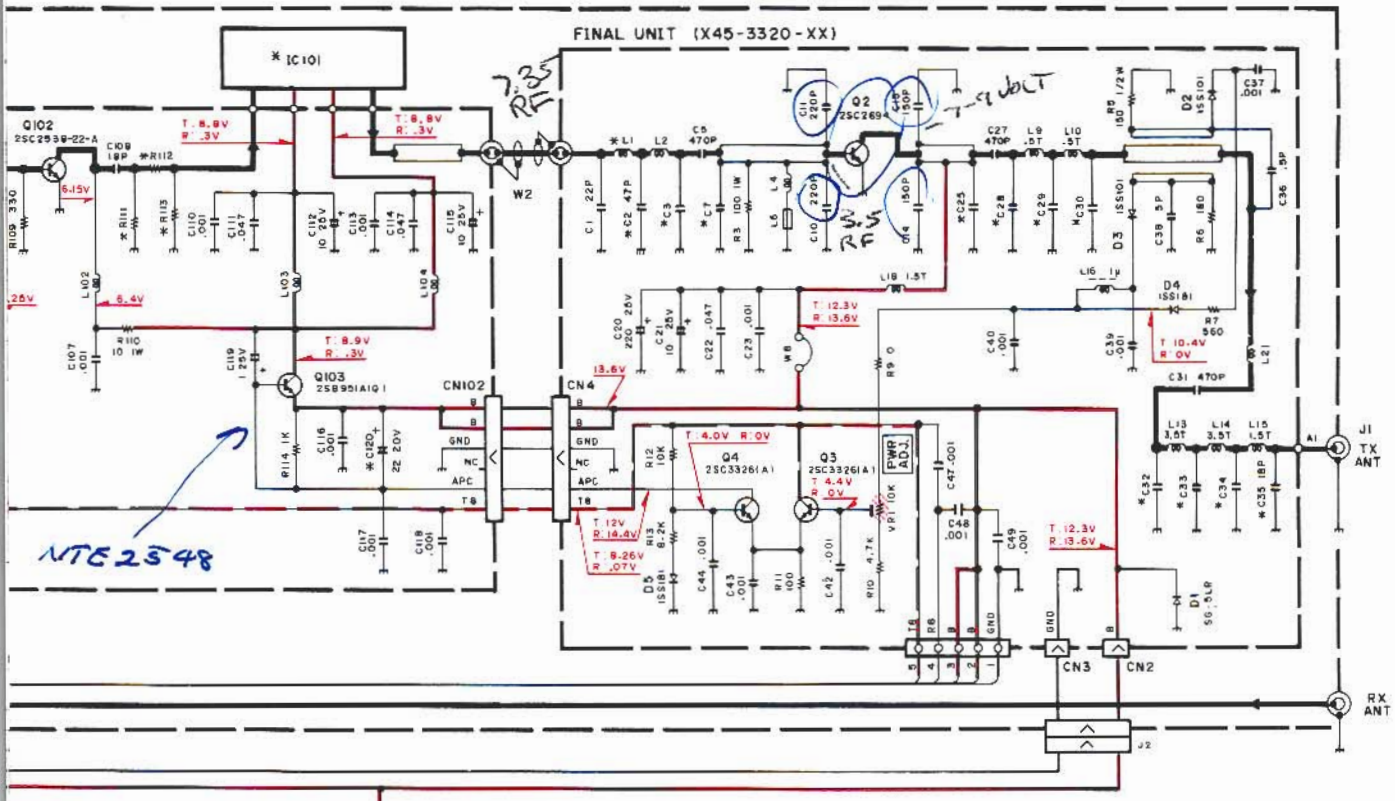

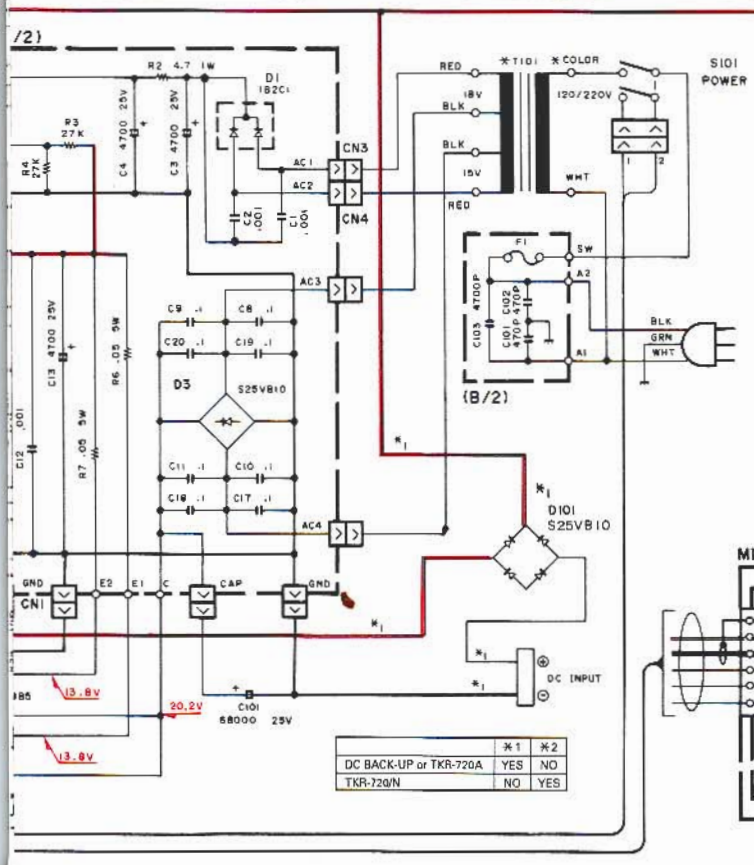

	T101	COLOR
K,K2	L01-8341-05	RED
M,M2,AM,AM2,NM,NM2	L01-8347-05	BRN

(X54-3070-XX)

IC1	: 75104G-604-1B
IC2	: XLJ93LC46
IC3	: M51943BML
IC4	: AN78N05
IC5,6	: μPC4558C
Q1,2,7,8	: DTC114EK
Q3	: 2SA1162(Y)
Q6	: 2SC3326(A)
D1,3	: B30-0855-05
D2,17	: B30-0856-05
D4-6	: 1SS184
D7,8,10,11,13	: 1SS181
D16,18	: B30-0857 05
D19,21	: 1SS272
D22,23	: B38-0308-05
D24	: 1SS133

(X43-3040-10)

Q1-3	: 2SC2712(Y)
Q4	: 2SB968(Q)
Q5,6	: 2N5885
D1	: 1B2C1
D3	: S25VB10
D4,6	: 1SS181
D5	: RD7.5E(B2)

(X45-3310-XX)

Q101	: 2SC2954
Q102	: 2SC2538-22-A
Q103	: 2SB951A(Q)
D101,102	: 1SS181

(X45-3320-XX)

Q2	: 2SC2694
Q3,4	: 2SC3326(A)
D1	: SG-5LIRI
D2,3	: 1SS101
D4,5	: 1SS181

(X57-3760-XX)

IC1	: μPC1242H
IC2	: MB3756
IC3	: NJM4558D
IC4	: L78N08
Q1,2,7	: 2SC2712(Y)
Q4,5,14,15	: 2SK125
Q6	: 2SK302(GR)
Q8,11-13	: DTC114EK
Q9,10	: 2SC3326(A)
D1,2	: 1SV172
D4	: ND487C1T
D5-11	: 1SS184
D12	: 1SS226

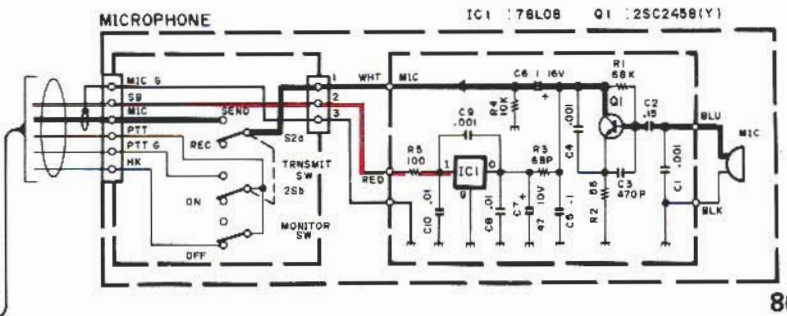

	*1	*2
DC BACK-UP or TKR-720A	YES	NO
TKR-720/N	NO	YES

TERMINAL FUNCTION

Connector No.	Pin No.	Pin Name	Function
AVR UNIT (X43-3040-10)			
(A/2)		AC1	AC input for reference voltage.
		AC2	AC input for reference voltage.
		AC3	AC input for power supply.
		AC4	AC input for power supply.
		GND	GND.
		CAP	For capacitor (+).
		C	Q5, Q6 collector.
		E1	For emitter Q6.
		E2	For emitter Q5.
		GND	GND for output.
		OUT	DC 13.6V output.
		B1	For base Q6.
		B2	For base Q5.
(B/2)		A1	AC power input.
		A2	AC power input.
		SW	Fused AC output.
DRIVE UNIT (X45-3310-XX)			
CN101	–	TX	Transmission signal input, coaxial connector.
CN102	1	B	DC 13.6V input
	2	B	DC 13.6V input.
	3	GND	GND.
	4	NC	No connect.
	5	APC	APC control input.
	6	T8	TX 8V output.
W2	–	DO	Drive output.
FINAL UNIT (X45-3320-XX)			
CN2	–	B	DC power supply input.
CN3	–	GND	GND.
CN4	1	B	DC 13.6V output.
	2	B	DC 13.6V output.
	3	GND	GND.
	4	NC	No connect.
	5	APC	APC control output.
	6	T8	TX 8V input.
W1	1	GND	GND.
	2	B	DC 13.6V output.
	3	B	DC 13.6V output.
	4	R8	RX 8V input.
	5	T8	TX 8V input.
W2	–	DO	RF drive input.
J1	–	ANT	Transmission signal output, antenna connector.
SIGNALING UNIT (X52-3140-10)			
CN1	1	SB	Power supply input via the power switch.
	2	PTT	PTT signal input.
	3	KEY	KEY signal input.
	4	ALERT	ALERT signal output.
	5	RESET	RESET signal input.
	6	LOC/REP	REPEAT signal input.
	7	COR	Busy signal output by the internal squelch.
	8	AFO	Detection signal output.
	9	DET	Detection signal output.
	10	AC	Audio mute control signal output.
	11	GND	GND.
	12	SQL	Noise squelch signal input.

Connector No.	Pin No.	Pin Name	Function
CN2	1	TONE	TONE signal (300Hz or less) output.
	2	MOD	MOD signal (300Hz to 3kHz) output.
	3	MIC MUTE	MIC MUTE signal output.
	4	GND	GND.
CN3	1	CH CLK	CH CLOCK signal input.
	2	CH DATA	CH DATA signal input.
	3	CH EN	CH ENABLE signal input.
DISPLAY UNIT (X54-3070-XX)			
CN1 For EEPROM writer	1	DO	EEPROM data output.
	2	DI	EEPROM data input.
	3	CLK	Clock signal input.
	4	EN1	EEPROM enable signal input 1.
	5	EN2	EEPROM enable signal input 2.
	6	RST	Microprocessor reset input.
	7	GND	GND.
	8	NC	No connection
CN2	1	CH EN	Channel enable.
	2	CH DAT	Channel data.
	3	CH CLK	Channel clock.
	4	T/R	Transmit/receive.
	5	BSY	Busy.
	6	DET	Detected signal input.
	7	AC	Audio mute control signal.
	8	MON	Monitor.
	9	CAL/COR	CALL/COR.
	10	AUX	REP/LOCAL.
	11	KEY	KEY line.
	12	P EN	RX PLL enable.
	13	P DAT	PLL data.
	14	P CLK	PLL clock.
	15	TP EN	TX PLL enable.
CN3	1	VOL	Volume control input.
	2	SQ	Squelch control input.
	3	GND	GND.
	4	SCNS	Scan signal input.
	5	EXM	
	6	SOUT	Serial output.
	7	SIN	Serial input.
	8	SB	Switched B input.
	9	GND	GND.
	10	PTT	PTT signal output.
	11	MIC	MIC signal output.
	12	MIG	MIC GND.
	13	HK	HOOK signal output.
CN4 (B/4) For MIC	1	SB	Switched B output.
	2	GND	GND.
	3	PTT	PTT.
	4	MIG	MIC GND.
	5	MIC	MIC.
	6	HOOK	HOOK.
CN5 (B/4)	1	C5	Common 5V.
	2	MON	MONITOR signal output.
	3	AUX	AUX signal output.
	4	D/A	DEL/ADD LED signal input.
	5	DAS	DEL/ADD signal output.
	6	SCN	Scan signal output.
	7	GND	GND.
	8	SB	Switched B input.
	9	PTT	PTT signal output.
	10	MIG	MIC GND.
	11	MIC	MIC signal output.
	12	HK	HOOK signal output.

TERMINAL FUNCTION

Connector No.	Pin No.	Pin Name	Function
CN6	1	SP	Speaker input.
	2	GND	GND.
CN7	1	INT	Internal speaker output.
	2	GND	GND.
CN8 For ACC connector	1	NC	No connection.
	2	NC	No connection.
	3	CO	CALL/COR or BUSY signal output.
	4	SO	Speaker signal output.
	5	GN	GND.
	6	DE	Detected signal output.
	7	SI	Speaker signal input.
	8	PT	PTT signal input.
	9	SB	Switched B output.
	10	SG	Speaker GND.
	11	LI	Line input.
	12	DE	Detected signal output.
	13	DI	Direct modulation input.
	14	LG	Line input GND.
	15	HK	HOOK signal input.
CN9 (D/4)	1	+B	Power supply input.
	2	ENC1	Encoder signal output.
	3	ENC2	Encoder signal output.
W1	1	HK	HOOK signal input.
	2	MIC	MIC signal input.
	3	MIG	MIG GND.
	4	PTT	PTT signal input.
	5	SB	Switched B output.
	6	GND	GND.
	7	SCN	Scan signal input.
	8	DAS	DEL/ADD signal input.
	9	D/A	DEL/ADD LED signal output.
	10	AUX	AUX signal input.
	11	MON	MONITOR signal input.
	12	C5	Common 5V output.
W2	1	ENC2	Encoder signal input.
	2	ENC1	Encoder signal input.
	3	+B	Power supply output.
TX-RX UNIT (X57-3760-XX)			
CN1		RX IN	Receiver signal input, coaxial connector.
CN2	1	GND	GND.
	2	VOL	Electronic volume control signal output.
	3	EXT MOD	External modulation input.
	4	MIG	MIC GND.
	5	MIC	MIC signal input.
	6	RLC	Power supply relay control signal output to the power switch.
	7	SQ VR	Detection signal output to SQL volume.
	8	GND	GND.
	9	HOOK	HOOK signal (MIC hook) input.
	10	PTT	PTT signal input.
	11	SB	Power supply output via the power switch.

Connector No.	Pin No.	Pin Name	Function
CN3	1	PLL DATA	PLL DATA signal input.
	2	T/R	T/R signal input.
	3	AC	Audio mute control signal input by the signaling unit.
	4	MON	MONITOR signal input.
	5	CH EN	CH ENABLE for signaling.
	6	CH CLK	CH CLOCK for signaling.
	7	BUSY	BUSY signal output.
	8	AFO	Detection signal input via the signaling unit.
	9	COR	BUSY signal output by the signaling unit.
CN4	1	AUX	REPEAT signal input.
	2	PLL CLK	PLL CLOCK signal input.
	3	TX PLL EN	TX PLL ENABLE signal input.
	4	KEY	KEY signal input.
	5	RX PLL EN	RX PLL ENABLE signal input.
	6	SP GND	Internal speaker GND.
	7	INT SP	Internal speaker output.
CN5	1	CH CLK	CH CLOCK signal output for signaling.
	2	CH DATA	CH DATA signal output for signaling.
	3	CH EN	CH ENABLE signal output for signaling.
CN6	1	SB	Power supply output via the power switch.
	2	PTT	PTT signal output for signaling.
	3	KEY	KEY signal output for signaling.
	4	ALERT	ALERT signal input for signaling.
	5	RESET	RESET signal output for signaling.
	6	AUX	REPEAT signal output for signaling.
	7	COR	BUSY signal input by the signaling unit.
	8	AFO	Detection signal input to the signaling unit.
	9	DET	Detection signal output by the signaling unit.
	10	AC	Audio mute control signal input by the signaling unit.
	11	GND	GND.
	12	SQL	Noise squelch signal output.
CN7	1	TONE	TONE signal (300Hz or less) input.
	2	MOD	MOD signal (300Hz to 3kHz) input.
	3	MIC MUTE	MIC MUTE signal input.
	4	GND	GND.
CN8	1	GND	GND.
	2	B	Power supply input (from Final to TX-RX).
	3	B	Power supply input (from Final to TX-RX).
	4	R8	RX 8V output.
	5	T8	TX 8V output.
CN9	–	TUNE	Filtered RX signal output, coaxial connector (for assemble line).
CN10		TX OUT	Transmission drive output, coaxial connector.

KMC-9 (BASE MICROPHONE)

KMC-9 External View

- **Chassis removal**

1. Remove the four rubber feet (❶).
2. Remove the four screws (❷).
3. Remove the chassis (❸).
4. Disconnect the 3-pin connector from the microphone amplification unit (❹).

- **Removal of microphone element and microphone amplification unit**

5. Remove the two screws holding cases A and B (❺).
6. Remove case B (❻).
7. Remove the microphone element and microphone amplification unit (❼).

KMC-9 Disassembly for Repair

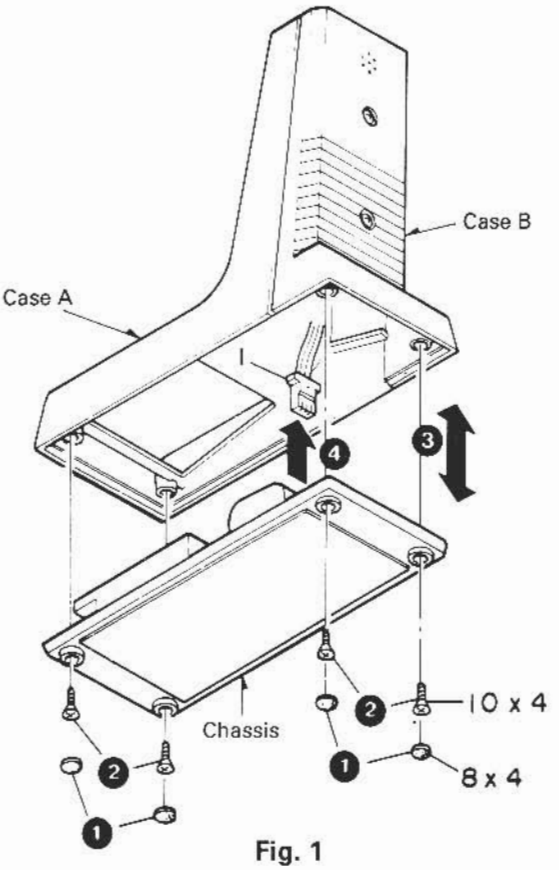

Fig. 1

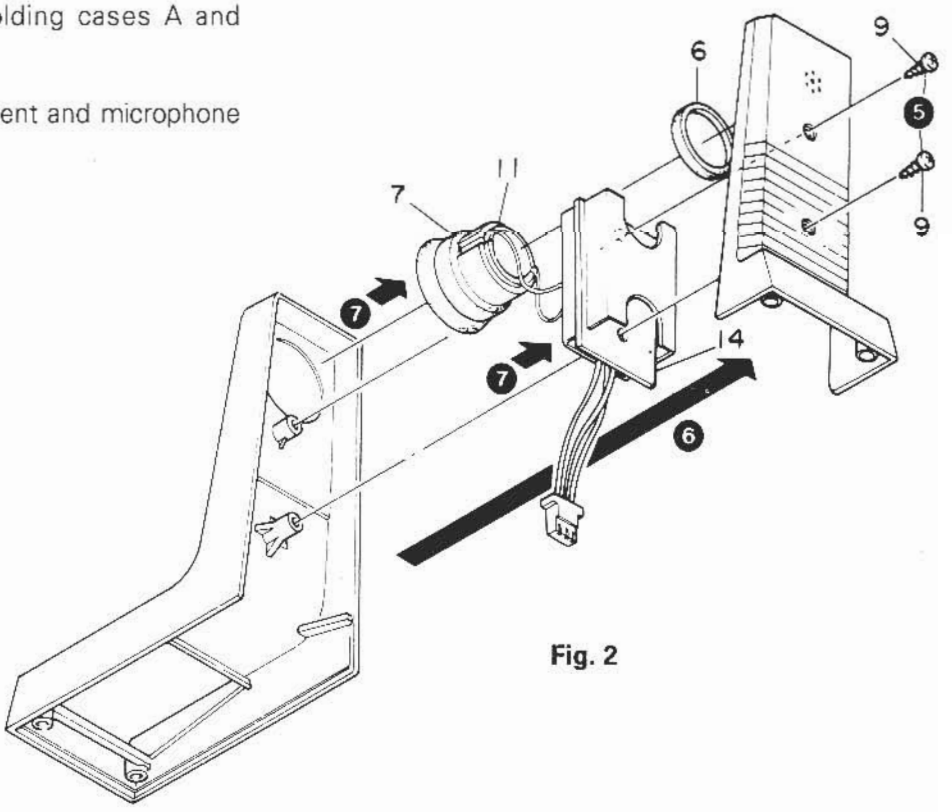

Fig. 2

KMC-9 (BASE MICROPHONE)

- **Switch unit removal**

8. Disconnect the 6-pin connector (❽).
9. Remove the springs (L and R) (❾).
10. Pull out the shaft (❿).
11. Remove spring A and slider (⓫).
12. Remove the switch unit while pressing the two claws holding the switch unit in the direction of the arrow (⓬).

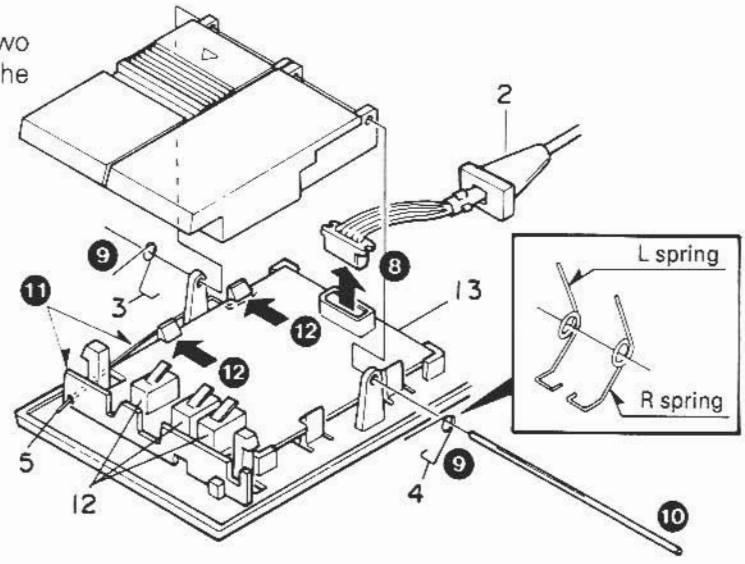

Fig. 3

- **Removing microphone plug**

To remove the microphone plug (module) from the Main unit or from the microphone, grasp the rubber cap from up and down with your fingers (to unlock it) and pull it out.

KMC-9 Parts List

* : New parts

Ref. No.	New parts	Parts No.	Description
1		E23-0612-08	Crimp terminal
2		E30-2080-08	Curl cord
3		G09-0423-08	L spring
4		G09-0424-08	R spring
5		G09-0425-08	Spring A
6		G13-0877-08	Cushion
7		G13-0878-08	Cushion D
8		J02-0448-08	Rubber foot
9		N44-3018-45	Tapping screw
10		N47-3010-46	Tapping screw
11		T91-0368-08	MIC unit
12		S50-1430-08	Micro switch
13		W02-0803-08	SW unit
14		W02-0395-08	MIC AMP unit

KMC-9 (BASE MICROPHONE)

KMC-9 Circuit Diagram

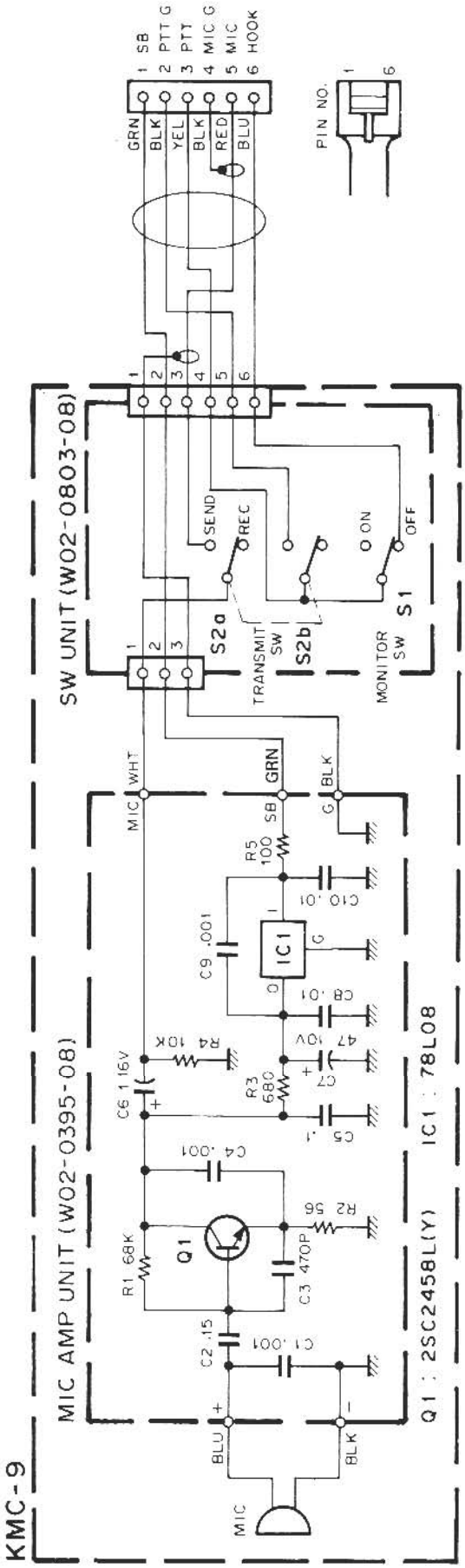

KMC-9 Specifications

Type	Uni-directional dynamic microphone (Preamplifier built-in)
Output impedance	600Ω ± 30% (at 1kHz)
Sensitivity	−50dB ± 3dB (at 1kHz, 0dB = 1V/μ bar)
Frequency characteristic	300 to 3000Hz (±6dB)
Power requirements	13.8V DC (Supplied from the radio)
Dimensions (W x H x D)	70 x 162 x 150 mm (2-3/4 x 6-3/8 x 5-29/32 inch)
Weight	550g (1.2 lbs)

TKR-720/N/A

SPECIFICATIONS

GENERAL

Frequency Range	150 to 174MHz : K,M,NM,AM 136 to 150MHz : K2,M2,NM2,AM2
Number of channels	1 : TKR-720/N 16 : TKR-720A
Channel Spacing	30kHz : K,K2 30kHz (25kHz) : M,M2,AM,AM2 12.5kHz : NM,NM2
PLL Channel Step	5kHz : TKR-720/A 6.25kHz : TKR-720N
Input Voltage	120/220V AC, 50/60Hz (Modifiable to DC backup)
Power Consumption	230W max.
Duty Cycle	50% at 50W output (100% at 15W output)
Temperature Range	−30°C to +60°C (−22°F to +140°F)
Dimensions	H : 4.72" (120mm) W : 12.99" (330mm) D : 15.08" (383mm)
Weight	28.66lbs (13kg)

RECEIVER (Measurements made per EIA standard EIA-204-C)

RF Input Impedance	50Ω
Sensitivity	
EIA 12dB SINAD	0.35μV
20dB Quieting	0.45μV
Squelch Sensitivity	0.2μV threshold
Modulation Acceptance	±7kHz : TKR-720/A ±3.5kHz : TKR-720N
Selectivity	−85dB : TKR-720/A −75dB : TKR-720N
Intermodulation	−80dB : TKR-720/A −70dB : TKR-720N
Spurious and Image Rejection	−90dB
Audio Power Output	4W at 4Ω less than 5% distortion
Frequency Stability	±0.0005% from −30°C to +60°C

TRANSMITTER (Measurements made per EIA standard EIA-152-B)

RF Power Output	50W adjustable to 15W (Duplexer input)
RF Output Impedance	50Ω
Spurious and Harmonics	−80dB
Modulation	
Direct FM Modulation	F3E, ±5kHz for 100% at 1000Hz : TKR-720/A F3E, ±2.5kHz for 100% at 1000Hz : TKR-720N
FM Noise	−50dB : TKR-720/A −45dB : TKR-720N
Microphone Impedance	Low impedance
Audio Distortion	Less than 3% at 1000Hz
Frequency Stability	±0.00025% from −30°C to +60°C

SIGNALING

Maximum Number of Tone Combination	8
QT Decoder/Encoder	
Decoder/Encoder Tone Frequency	67.0 to 210.7Hz (in 0.1Hz steps)
Decoder Response Time	200msec. or less
Squelch tail Elimination Time	100msec.
Encoder Frequency Error	±0.05% or less
Sensitivity	SINAD 8dB or less
DQT Decoder/Encoder	
DQT Code	23 bits total ; a 3-digit octal number (0 to 7 and 12 bits) with error correction (11 bits)
Decoder Response time	250msec. or less
Turn-off Code Transmission Time	156msec.
Squelch Sensitivity	SINAD 8dB or less
Time-out-timer	Adjustable OFF 30sec. to 5min.
Hang up Timer	Adjustable 0 to 5sec.
Preset Squelch Sensitivity	0.2μV threshold, 12dB SINAD +10dB or less tight

KENWOOD CORPORATION
14-6, Dogenzaka 1-chome, Shibuya-ku, Tokyo 150, Japan

KENWOOD SERVICE CORPORATION
P.O. BOX 22745, 2201 East Dominguez Street, Long Beach, CA 90801-5745, U.S.A.

KENWOOD ELECTRONICS LATIN AMERICA S.A.
P.O. BOX 55-2701 Piso 6 Plaza Chase Cl. 47 y Aquilino de la Guardio Panama, Republic of Panama

KENWOOD ELECTRONICS CANADA INC.
6070 Kestrel Road, Mississauga, Ontario, Canada L5T 1S8

KENWOOD ELECTRONICS DEUTSCHLAND GMBH
Rembrücker Str. 15, 6056 Heusenstamm, Germany

KENWOOD ELECTRONICS BENELUX N.V.
Mechelsesteenweg 418 B-1930 Zaventem, Belgium

TRIO-KENWOOD FRANCE S.A.
13, Boulevard Ney, 75018 Paris, France

TRIO-KENWOOD U.K. LIMITED
KENWOOD House, Dwight Road, Watford, Herts., WD1 8EB United Kingdom

KENWOOD ELECTRONICS NEDERLAND B.V.
Amsterdamseweg 35, 1422 AC Uithoorn, The Netherlands

KENWOOD ELECTRONICS ITALIA S.p.A.
Via G. Sirtori, 7/9 20129 Milano, Italy

KENWOOD IBERICA S.A.
Bolivia, 239-08020 Barcelona, Spain

KENWOOD ELECTRONICS AUSTRALIA PTY. LTD.
(A.C.N. 001 499 074)
P.O. Box 504, 8 Figtree Drive, Australia Centre, Homebush, N.S.W. 2140, Australia

KENWOOD & LEE ELECTRONICS, LTD.
Unit 3712-3724, Level 37, Tower one Metroplaza, 223 Hing Fong Road, Kwai Fong, N.T., Hong Kong

1994-7/1994-8/1995-3/1995-7 (N) 600

KENWOOD

LSB-0124

SERVICE BULLETIN Land Mobile Division

SUBJECT	TKR-720/820 CHANNEL SELECTION VIA THE ACCESSORY CONNECTOR	DATE	03/16/92

The TKR-720 and TKR-820 are normally programmed with one channel and up to 8 QT or DQT tones. The following information will allow selection of up to four channels from the accessory connector. Optionally, this capability also permits selection of the first 4 tones for use as default tones for dispatch purposes.

On TKR-820's prior to S/N 104XXXX, diode D19 and jumper J12 need to be installed on the Display board. The revised TKR-820 Service Manual, Part Number B51-8050-00, shows the proper location of these components. TKR-720's already include the parts necessary for channel selection via the accessory connector.

PROCEDURE:

1. Program channels 1 to 4 in the usual manner with the KPT-20.

2. Prepare a rectangular plug to be inserted into the accessory jack. The plug will require male crimp terminals, Part Number E23-0613-05, to be inserted into positions 1, 11, 14, and 15. Pin 1 is the hook line which must be grounded in order to change channels. Pin 11 is ground. Pins 14 and 15 are BCD channel selection lines. These lines are normally held "HI" with pull-up resistors on the Display board.

3. If selectable default tones are desired, program the Signaling board EEPROM accordingly with the KPT-20. The default tone is the tone encoded during transmit (PTT) when COR is NOT present. JAQ4 software (see Service Bulletin T-89-88-LM) must be used in the Signaling unit to facilitate default tone operation.

4. Connect a 3 pin wire harness (Part Number E31-3341-05) from the TX-RX board connector CN5 to the Signaling board connector CN3.

When arranged for selectable channels and default tones, the TKR-720/820 can be programmed with a common channel and different selectable default tones or vise versa. Any tone that is programmed (8 tones maximum), however, is available for repeat use regardless of the channel selected.

In order to change channels, pins 14 and 15 must be pulled low as follows:

	CH1	CH2	CH3	CH4
PIN 14	H	L	H	L
PIN 15	H	H	L	L

(MALE PW CRIMP TERMINALS E23-0613-05).

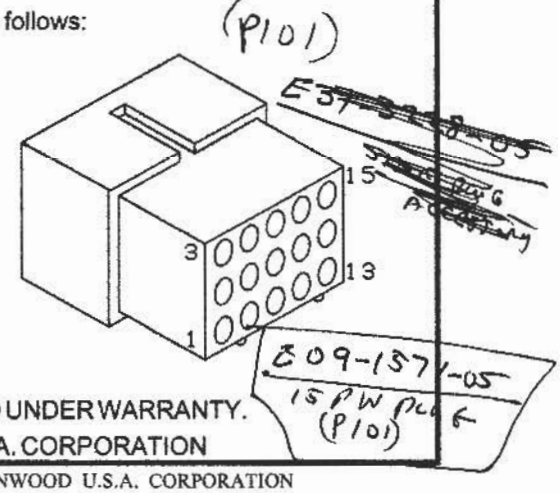

THIS IS AN OPTIONAL CHANGE THAT IS NOT COVERED UNDER WARRANTY.

COPYRIGHT (C) 03/16/92 EWP FOR KENWOOD U.S.A. CORPORATION

Communications & Test Equipment Group

KENWOOD U.S.A. CORPORATION
Communications & Test Equipment Group
2201 E. Dominguez Street
Long Beach, California 90810
Phone: (310) 761-8275
FAX: (310) 761-8290

no cox

MOLEX PINS .062

MCM #

28-9420 CRIMP - RM. .062 — 19¢ EA

WALDOM #02-06-1103
(MOLEX)

28-9415 - CRIMP MALE .062

WALDOM
(MOLEX) #02-06-2103 — 19¢ EA.

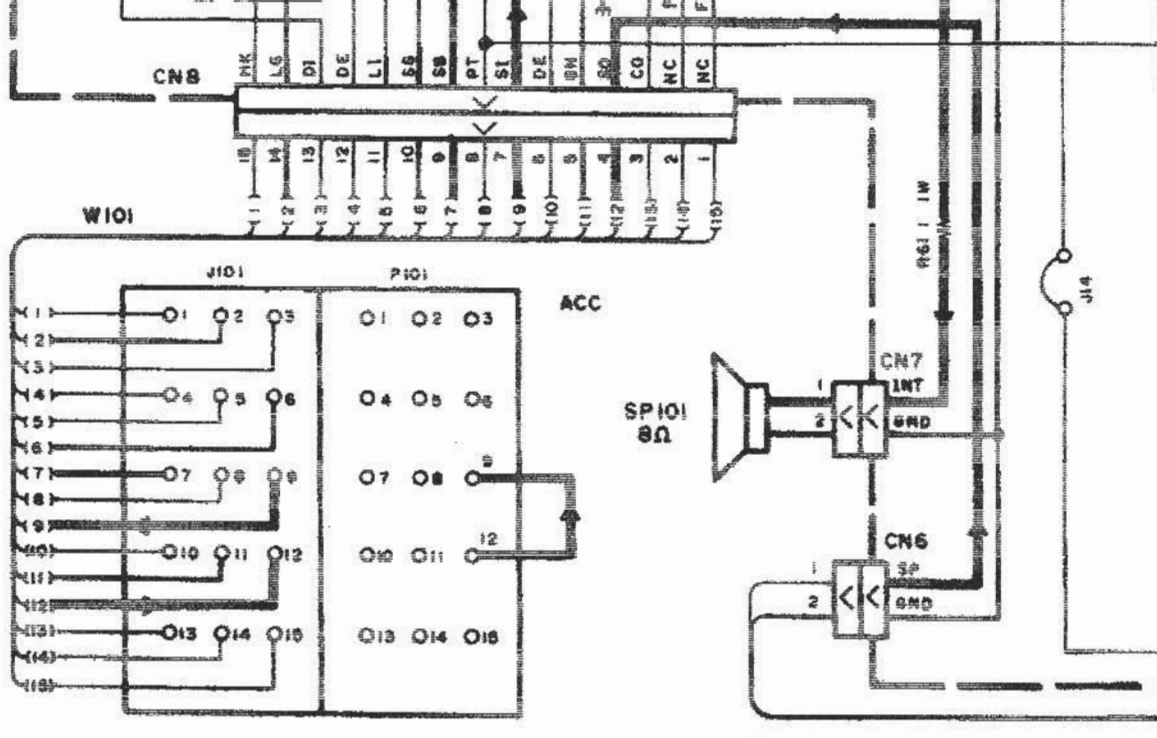
CN8
PK
LG
DI
DE
LI
SG
SB
PT
SI
DE
BN
SO
CO
NC
NC
W101
J101
P101
ACC
SP101
8Ω
CN7
INT
GND
CN6
SP
GND
R61 1W
J14

Kenwood TKR-720/820

molex
one company » a world of innovation

This document was generated on 09/10/2009

PLEASE CHECK WWW.MOLEX.COM FOR LATEST PART INFORMATION

Part Number: **0003062151**

Status: **Active**

Overview: Standard .062"

Description: 1.57mm (.062") Diameter Standard .062 Pin and Socket Plug Housing, 15 Circuits, With Standard Mounting Ears

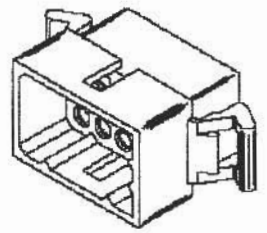

Series image - Reference only

Documents:

3D Model
Packaging Specification (PDF)
Drawing (PDF)
Product Specification PS-02-06 (PDF)
Related Catalog Page (PDF)

General	
Product Family	Crimp Housings
Series	1625
Comments	Polarized to Mating Part
Overview	Standard .062"
Product Name	Standard .062"
Physical	
Breakaway	No
Circuits (maximum)	15
Circuits Detail	3x5
Color - Resin	Natural
Flammability	94V-2
Gender	Plug
Glow-Wire Compliant	No
Keying to Mating Part	None
Lock to Mating Part	Yes
Material - Resin	Nylon
Number of Rows	3
Packaging Type	Bag
Panel Mount	Yes
Pitch - Mating Interface (in)	0.145 In
Pitch - Mating Interface (mm)	3.68 mm
Pitch - Term. Interface (in)	0.145 In
Pitch - Term. Interface (mm)	3.96 mm
Polarized to Mating Part	Yes
Stackable	No
Temperature Range - Operating	-40°C to +105°C
Electrical	
CSA	LR19980
Current - Maximum	5A
TUV	R75142
UL	E29179
Material Info	
Old Part Number	1625-15P
Reference - Drawing Numbers	
Product Specification	PS-02-06
Sales Drawing	SD-1625-15*

EU RoHS
ELV and RoHS Compliant
REACH SVHC
Contains SVHC: No

China RoHS

Need more information on product environmental compliance?

Email productcompliance@molex.com
Please visit the Contact Us section for any non-product compliance questions.

HFLH Not Reviewed

Search Parts in this Series
1625 Series

Mates With
1625 Receptacle

Use With
Female Crimp Terminals 1561Link:4559 , 4529 , 2190 , 2189 , 1787 , 1855 . Male Crimp Terminals 1560 , 1786 , 1854, 1778 Male PC Tail Terminals, 1779 Female PC Tail Terminals

This document was generated on 09/10/2009

PLEASE CHECK WWW.MOLEX.COM FOR LATEST PART INFORMATION

molex
one company » a world of innovation

This document was generated on 09/09/2009

PLEASE CHECK WWW.MOLEX.COM FOR LATEST PART INFORMATION

Part Number: **0003062152**
Status: **Active**
Overview: Standard .062"
Description: 1.57mm (.062") Diameter Standard .062 Pin and Socket Plug Housing, 15 Circuits, Without Mounting Ears

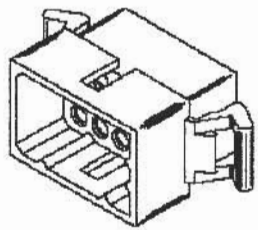

Series image - Reference only

Documents:
3D Model
Packaging Specification (PDF)
Drawing (PDF)
Product Specification PS-02-06 (PDF)
Related Catalog Page (PDF)

General	
Product Family	Crimp Housings
Series	1625
Comments	Polarized to Mating Part
Overview	Standard .062"
Product Name	Standard .062"
Physical	
Breakaway	No
Circuits (maximum)	15
Circuits Detail	3x5
Color - Resin	Natural
Flammability	94V-2
Gender	Plug
Glow-Wire Compliant	No
Keying to Mating Part	None
Lock to Mating Part	Yes
Material - Resin	Nylon
Number of Rows	3
Packaging Type	Bag
Panel Mount	No
Pitch - Mating Interface (in)	0.145 in
Pitch - Mating Interface (mm)	3.68 mm
Pitch - Term. Interface (in)	0.145 in
Pitch - Term. Interface (mm)	3.96 mm
Polarized to Mating Part	Yes
Stackable	No
Temperature Range - Operating	-40°C to +105°C
Electrical	
CSA	LR19980
Current - Maximum	5A
UL	E29179
Material Info	
Old Part Number	1625-15P1
Reference - Drawing Numbers	
Product Specification	PS-02-06
Sales Drawing	SD-1625-15*

EU RoHS **China RoHS**
ELV and RoHS Compliant
REACH SVHC
Contains SVHC: No

Need more information on product environmental compliance?

Email productcompliance@molex.com
Please visit the Contact Us section for any non-product compliance questions.

HFLH Not Reviewed

Search Parts in this Series
1625 Series

Mates With
1625 Receptacle

Use With
Female Crimp Terminals 1561Link:4559 , 4529 , 2190 , 2189 , 1787 , 1855 . Male Crimp Terminals 1560 , 1786 , 1854, 1778 Male PC Tail Terminals. 1779 Female PC Tail Terminals

This document was generated on 09/09/2009

PLEASE CHECK WWW.MOLEX.COM FOR LATEST PART INFORMATION

molex
one company » a world of innovation

This document was generated on 05/08/2009

PLEASE CHECK WWW.MOLEX.COM FOR LATEST PART INFORMATION

Part Number: **0003062157**

Status: **Active**

Overview: Standard .062"

Description: 1.57mm (.062") Diameter Standard .062 Pin and Socket Receptacle Housing, 15 Circuits, With Standard Mounting Ears, Positive Lock

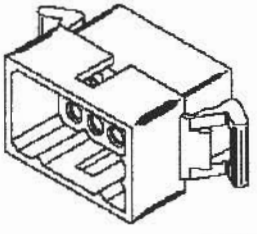

Series image - Reference only

Documents:

Drawing (PDF)
Product Specification PS-02-06 (PDF)
Packaging Specification (PDF)
Related Catalog Page (PDF)

General	
Product Family	Crimp Housings
Series	1625
Comments	Polarized to Mating Part
Overview	Standard .062"
Product Name	Standard .062"
Physical	
Breakaway	No
Circuits (maximum)	15
Circuits Detail	3x5
Color - Resin	Natural
Flammability	94V-2
Gender	Receptacle
Glow-Wire Compliant	No
Keying to Mating Part	None
Lock to Mating Part	Yes
Material - Resin	Nylon
Number of Rows	3
Packaging Type	Bag
Panel Mount	Yes
Pitch - Mating Interface (in)	0.145 in
Pitch - Mating Interface (mm)	3.68 mm
Pitch - Term. Interface (in)	0.145 In
Pitch - Term. Interface (mm)	3.96 mm
Polarized to Mating Part	Yes
Ports	1
Stackable	No
Temperature Range - Operating	-40°C to +105°C
Electrical	
CSA	LR19980
Current - Maximum	4A
TUV	R75142
UL	E29179
Material Info	
Old Part Number	1625-15P7
Reference - Drawing Numbers	
Product Specification	PS-02-06
Sales Drawing	SD-1625-15*7*

EU RoHS
ELV and RoHS Compliant

China RoHS

REACH SVHC
Contains SVHC: No

Need more information on product environmental compliance?

Email productcompliance@molex.com
Please visit the Contact Us section for any non-product compliance questions.

Search Parts in this Series
1625 Series

Mates With
1625 Plug

Use With
Female Crimp Terminals 1561Link:4559 , 4529 , 2190 , 2189 , 1787 , 1855 . Male Crimp Terminals 1560 , 1786 , 1854. 1778 Male PC Tail Terminals. 1779 Female PC Tail Terminals

This document was generated on 05/08/2009

PLEASE CHECK WWW.MOLEX.COM FOR LATEST PART INFORMATION

molex
one company » a world of innovation

This document was generated on 09/09/2009

PLEASE CHECK WWW.MOLEX.COM FOR LATEST PART INFORMATION

Part Number: **0003066155**
Status: **Active**
Overview: Standard .062"
Description: 1.57mm (.062") Diameter Standard .062 Pin and Socket Receptacle Housing, 15 Circuits, With Pre-bent Mounting Ears

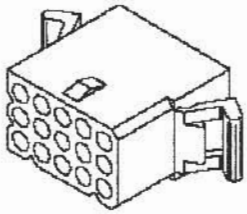

Series image - Reference only

Documents:
3D Model
Packaging Specification (PDF)
Drawing (PDF)
Product Specification PS-02-06 (PDF)
Related Catalog Page (PDF)

General

Product Family	Crimp Housings
Series	1625
Comments	Polarized to Mating Part
Overview	Standard .062"
Product Name	Standard .062"

Physical

Breakaway	No
Circuits (maximum)	15
Circuits Detail	3x5
Color - Resin	Natural
Flammability	94V-2
Gender	Receptacle
Glow-Wire Compliant	No
Keying to Mating Part	None
Lock to Mating Part	Yes
Material - Resin	Nylon
Number of Rows	3
Packaging Type	Bag
Panel Mount	Yes
Pitch - Mating Interface (in)	0.145 In
Pitch - Mating Interface (mm)	3.68 mm
Pitch - Term. Interface (in)	0.145 In
Pitch - Term. Interface (mm)	3.96 mm
Polarized to Mating Part	Yes
Stackable	No
Temperature Range - Operating	-40°C to +105°C

Electrical

CSA	LR19980
Current - Maximum	5A
TUV	R75142
UL	E29179

Material Info

Old Part Number	1625-15R2

Reference - Drawing Numbers

Product Specification	PS-02-06
Sales Drawing	SD-1625-15*

EU RoHS ELV and RoHS Compliant
China RoHS
REACH SVHC Contains SVHC: No

Need more information on product environmental compliance?

Email productcompliance@molex.com
Please visit the Contact Us section for any non-product compliance questions.

HFLH Not Reviewed

Search Parts in this Series
1625 Series

Mates With
1625 Plug

Use With
Female Crimp Terminals 1561Link:4559 , 4529 , 2190 , 2189 , 1787 , 1855 . Male Crimp Terminals 1560 , 1786 , 1854, 1778 Male PC Tail Terminals. 1779 Female PC Tail Terminals

This document was generated on 09/09/2009

PLEASE CHECK WWW.MOLEX.COM FOR LATEST PART INFORMATION

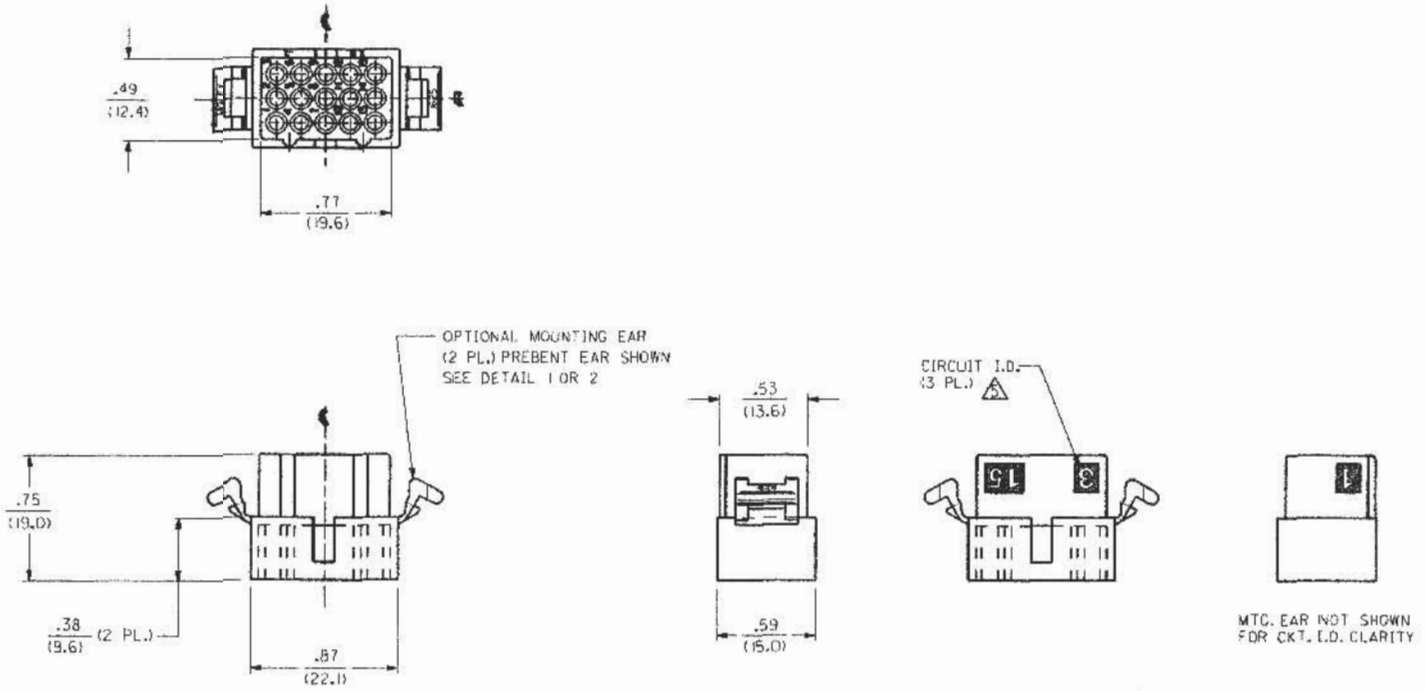

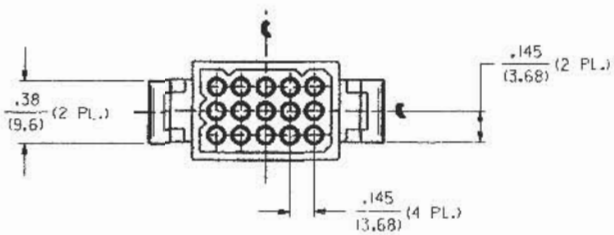

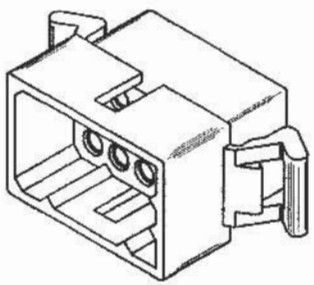

PLUG HOUSING

CHART AND NOTES ON SHEET 3

MFG.	SH.	REV.	LTR.	REVISIONS
3	02			
2	02			
1	02			

LTR.	REVISIONS
02	REVISION ECN #U10777 97-4-22 JIWANG
01	FINAL REL. - 1582 ECN #U8 1285 6-22-95 RW
Q	REVISE PER ECR U4 0050 GK 1/12/94 RW
P	REVISE PER ECN #U3 0508 4/1/93 RW
O	REVISE PER ECR U2 0850 GK 6/5/92 RW
N	REVISE PER ECR U1 2251 GK 11/20/91 RW
M	REVISE PER ECR U1 2108 GK 10/28/91 RW
L	REMOVE P/NO. FROM - 1582. ECR U1 1908 GK 9/20/91 RW
K1	ADDED B FINAL REL PER ERO #28346 GEP 5-4-89 RW
K	ADDED OPTIONS ECR # U90277 KBW 03-22-89 RW
J	ADDED OPTIONS ECR # U82108 KBW 10-10-88 RW
H	REV. & REDRAWN ECR U8 1714 GEP 7-15-88 RW

REVISE ONLY ON CAD SYSTEM

DIMENSIONS SHOWN METRIC INCH

UNLESS OTHERWISE SPECIFIED TO TOLERANCES INDICATE ± DIM

	INCH	METRIC
3 PLACE	± .010	---
2 PLACE	± .014	± 0.25
1 PLACE	---	± 0.35

DRAFT WHERE APPLICABLE MUST REMAIN WITHIN DIMENSIONS

TITLE .062/(1.57) HOUSING; PLUG AND RECEPTACLE; 15 CKT, .145/(3.68) CTRS

MOLEX INCORPORATED
LISLE, ILL. U.S.A.

SHEET NO. 1 of 3 DATE 7/15/88

PART NO. SEE CHART

DWG. NO. SD-1625-15•

DRWN. BY CEP CHK'D. BY RW

APPRV. BY RAS SCALE 2:1

FILE NAME S1625-15X1 DWN

THIS DRAWING CONTAINS INFORMATION THAT IS PROPRIETARY TO MOLEX INC. AND SHOULD NOT BE USED WITHOUT WRITTEN PERMISSION

REV. CP SIZE C

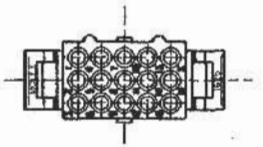

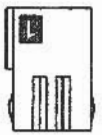

MTG. EAR NOT SHOWN
FOR CKT. I.D. CLARITY

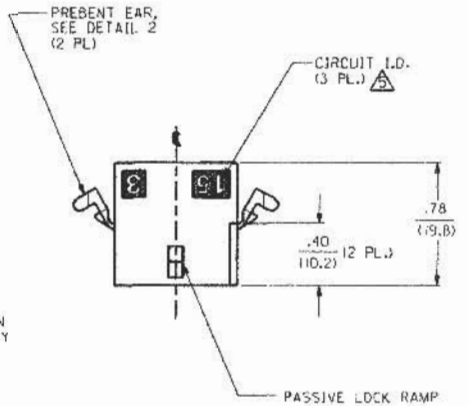

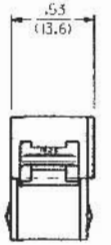

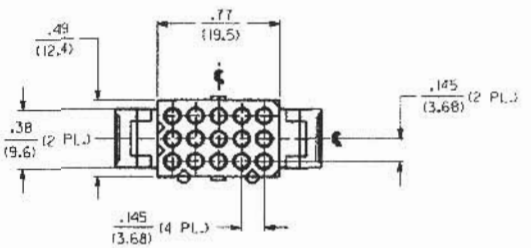

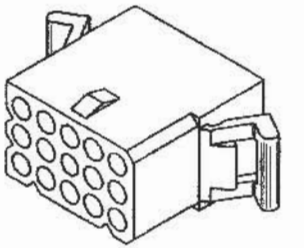

RECEPTACLE HOUSING

CHART AND NOTES ON SHEET 3

LTR.	REVISIONS	LTR.	REVISIONS
		P	SEE SHT. 1
02	SEE SHT. 1	O	SEE SHT. 1
O	SEE SHT. 1	H	SEE SHT. 1

DIMENSIONS SHOWN (METRIC) [INCH]
UNLESS OTHERWISE SPECIFIED
TOLERANCES: ANGULAR ± 30' ±0

	INCH	METRIC
3 PLACE	± .010	---
2 PLACE	± .014	± 0.25
1 PLACE	---	± 0.35

CHART DATA APPLICABLE MUST REMAIN WITHIN DIMENSIONS

DRWN. GEP | CHKD. RW | APPR. RAS | SCALE 2 : 1

▽ = O ▼ = O REVISE ONLY ON CAD SYSTEM

TITLE .062/(1.57) HOUSING;
PLUG AND RECEPTACLE;
15 CKT., .145/(3.68) CTRS

MOLEX INCORPORATED
LISLE, ILL. 60532 U.S.A.

SHEET NO. 2 | DATE 7/18/88

PART NO. SEE CHART | DWG. NO. SD-1625-15•

FILE NAME 51625152 | REV. CP | SIZE C

THIS DRAWING CONTAINS INFORMATION THAT IS PROPRIETARY TO MOLEX INC. AND CANNOT BE USED WITHOUT WRITTEN PERMISSION

PLUG	
PART NO.	ENG. NO.
03-06-2151 ⚠4	1625-15P
03-06-7155	1625-15P IBN
03-06-7152	1625-15P IBK
03-06-2152	1625-15P I
03-06-7151 ⚠4	1625-15PBK
03-06-7153 ⚠4	1625-15PBN
03-06-7154 ⚠4	1625-15PBU

RECEPTACLE	
PART NO.	ENG. NO.
03-06-1152	1625-15R1
03-06-6152	1625-15R IBK
03-06-6155	1625-15R2
NOT TOOLED	1625-15R2BK

RECEPTACLE LEGEND:

1625-15R•••

CIRCUIT SIZE

R = RECEPTACLE

1 = WITHOUT EARS
2 = WITH PREBENT EARS

COLOR:
BLANK = NATURAL COLOR
AM = AMBER BK = BLACK BU = BLUE
BN = BROWN GY = GRAY GN = GREEN
OR = ORANGE RD = RED YW = YELLOW

PLUG LEGEND:

1625-15P•••

CIRCUIT SIZE

P = PLUG

BLANK = WITH MOUNTING EARS
I = WITHOUT EARS

COLOR:
BLANK = NATURAL COLOR
AM = AMBER BK = BLACK BU = BLUE
BN = BROWN GY = GRAY GN = GREEN
OR = ORANGE RD = RED YW = YELLOW

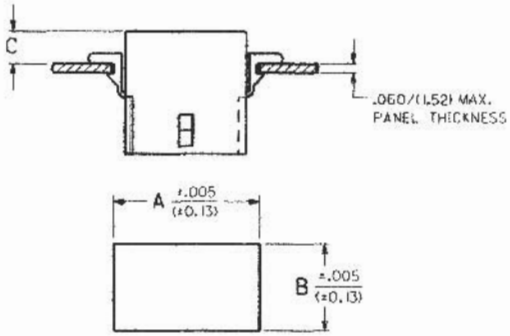

RECOMMENDED HOLE PATTERN

RECEP.	.930 (23.62)	.569 (14.45)		.22 (5.6)
PLUG	1.032 (26.21)	.620 (15.75)	.20 (5.1)	.21 (5.3)
PART	DIM. A	DIM. B	DIM. C (STANDARD EAR)	DIM. C (PREBENT EAR)

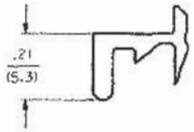

DETAIL 1

STANDARD MOUNTING EAR
SCALE 4:1

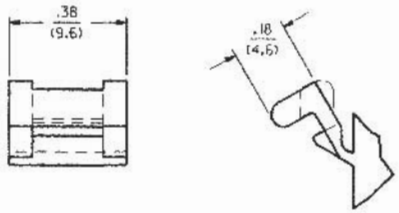

DETAIL 2

.062/(1.57) PREBENT MOUNTING EAR
(SCALE 4:1)

NOTES:

1. MATERIAL: NYLON TYPE 6/6, 94V-2.
2. THIS PART COMPLIES WITH MOLEX PRODUCT SPEC. 02-06.
3. THIS HOUSING FOR USE WITH .062/(1.57) DIA. TERMINALS.
4. ⚠ WHERE DENOTED IN CHART, TOOLS ARE BUILT WITH PREBENT MOUNTING EARS PER DETAIL 2 AND SUPERSEDE ALL TOOLS PREVIOUSLY BUILT WITH THE STANDARD MOUNTING EARS.
5. ⚠ CIRCUIT I.D. NUMBERS ON HOUSING APPEAR ON PART FROM TOOLS BUILT AFTER 1/15/94.

LTR.	REVISIONS	LTR.	REVISIONS
		N	SEE SHEET 1
		M	SEE SHEET 1
		L	SEE SHEET 1
02	SEE SHEET 1	K1	SEE SHEET 1
01	SEE SHEET 1	K	SEE SHEET 1
C	SEE SHEET 1	J	SEE SHEET 1
B	SEE SHEET 1	H	SEE SHEET 1

DIMENSIONS SHOWN IN/(MM)
UNLESS OTHERWISE SPECIFIED TOLERANCES ABSOLUTE ± SUP 10

	INCH	METRIC
3 PLACE	± .010	---
2 PLACE	± .014	± 0.25
1 PLACE	---	± 0.35

DRAFT WIDGE APPLICABLE MUST REMAIN WITHIN SPECIFIED

DRAWN BY GEP DATE 8/1 RW
APP'D BY RAS SCALE 2 : 1

= 0 ▼ = 0 REVISE ONLY ON CAD SYSTEM

TITLE .062/(1.57) HOUSING; PLUG AND RECEPTACLE; 15 CKT. .145/(3.68) CTRS

MOLEX INCORPORATED LISLE, ILL. U.S.A.

SHEET NO. 3 DATE 7/18/88

PART NO. SEE CHART DWG. NO. SD-1625-15•

FILE NAME 5162SD03 REV. CP SIZE C

THIS DRAWING CONTAINS INFORMATION THAT IS PROPRIETARY TO MOLEX INC. AND SHOULD NOT BE USED WITHOUT WRITTEN PERMISSION

NTE
ELECTRONICS, INC
44 FARRAND STREET
BLOOMFIELD, NJ 07003
(973) 748-5089

2SB951

NTE2547 (NPN) & NTE2548 (PNP)
Silicon Complementary Transistors
Darlington Driver

Features:
- High DC Current Gain
- High Current Capacity and Wide ASO
- Low Saturation Voltage

Applications:
- Motor Drivers
- Printer Hammer Drivers
- Relay Drivers
- Voltage Regulator Control

Absolute Maximum Ratings: (T_A = +25°C unless otherwise specified)

Collector to Base Voltage, V_{CBO} 110V
Collector to Emitter Voltage, V_{CEO} 100V
Emitter to Base Voltage, V_{EBO} 6V
Collector Current, I_C
  Continuous 8A
  Peak 12A
Collector Dissipation, P_C
  T_A = +25°C 2.0W
  T_C = +25°C 30W
Operating Junction Temperature, T_J ..... +150°C
Storage Temperature Range, T_{stg} ..... –55° to +150°C

Electrical Characteristics: (T_A = +25°C unless otherwise specified)

Parameter	Symbol	Test Conditions	Min	Typ	Max	Unit
Collector Cutoff Current	I_{CBO}	V_{CB} = 80V, I_E = 0	–	–	0.1	mA
Emitter Cutoff Current	I_{EBO}	V_{EB} = 5V, I_C = 0	–	–	3.0	mA
DC Current Gain	h_{FE}	V_{CE} = 3V, I_C = 4A	1500	4000		
Gain Bandwidth Product	f_T	V_{CE} = 5V, I_C = 4A	–	20	–	MHz

Electrical Characteristics (Cont'd): (T_A = +25°C unless otherwise specified)

Parameter	Symbol	Test Conditions	Min	Typ	Max	Unit
Collector to Emitter Saturation Voltage NTE2547	$V_{CE(sat)}$	I_C = 4A, I_B = 8mA	–	0.9	1.5	V
NTE2548			–	1.0	–	V
Base to Emitter Saturation Voltage	$V_{BE(sat)}$	I_C = 4A, I_B = 8mA	–	–	2.0	V
Collector–Base Breakdown Voltage	$V_{(BR)CBO}$	I_C = 5mA, I_E = 0	110	–	–	V
Collector–Emitter Breakdown Voltage	$V_{(BR)CEO}$	I_C = 50mA, R_{BE} = ∞	100	–	–	V
Turn–On Time NTE2547	t_{on}	I_C = 4A, I_{B1} = 500mA, I_{B2} = –500mA, Pulse Width = 50µs, Duty Cycle ≤ 1%, Note 1	–	0.6	–	µs
NTE2548			–	0.7	–	µs
Storage Time NTE2547	t_{stg}		–	4.8	–	µs
NTE2548			–	1.4	–	µs
Fall Time NTE2547	t_f		–	1.6	–	µs
NTE2548			–	1.5	–	µs

Note 1. For NTE2548 (PNP), the polarity is reversed.

NTE2547
(NPN)

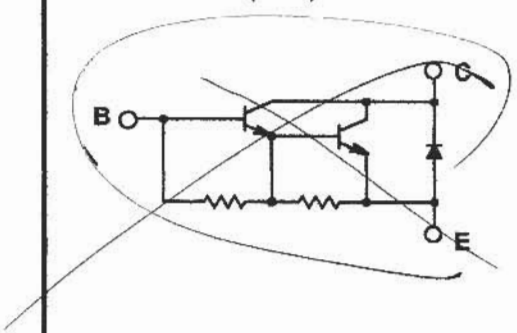

NTE2548
(PNP)

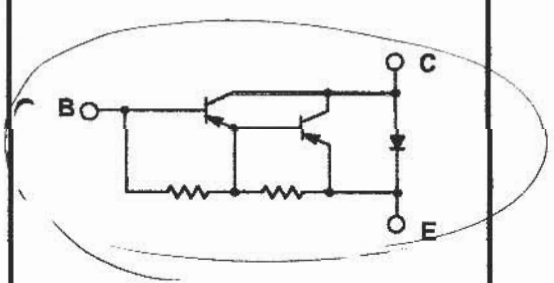

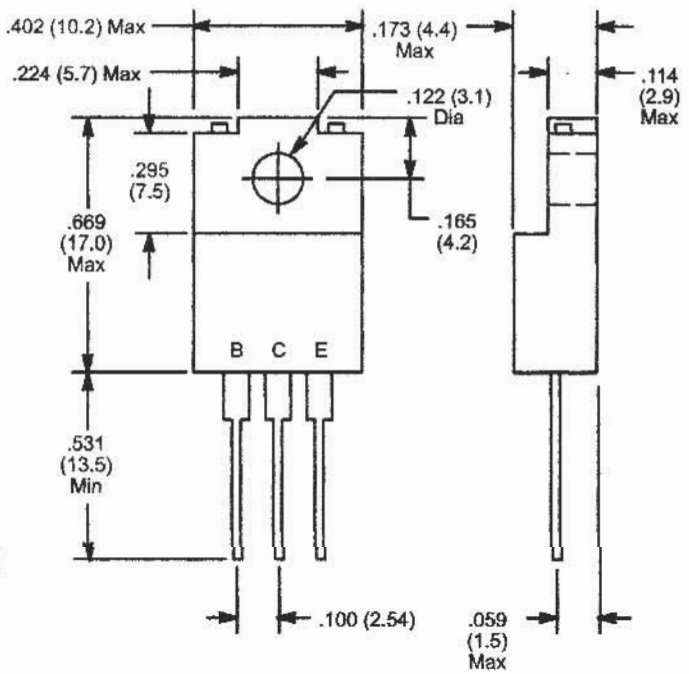

NOTE: Tab is isolated

ELECTRONICS, INC.
44 FARRAND STREET
BLOOMFIELD, NJ 07003
(973) 748-5089

2N3055
2N3771
2N3772
2N5885
NTE 181

NTE180 (PNP) & NTE181 (NPN)
Silicon Power Transistor
High Power Audio Amplifier

Description:

The NTE180 (PNP) and NTE181 (NPN) are silicon complementary transistors in a TO3 type case designed for use as output devices in complementary audio amplifiers to 100 watts music power per channel.

Features:

- High DC Current Gain: h_{FE} = 25 – 100 @ I_C = 7.5A
- Excellent Safe Operating Area

Absolute Maximum Ratings:

Collector–Emitter Voltage, V_{CER} 100V
Collector–Base Voltage, V_{CB} 100V
Collector–Emitter Voltage, V_{CEO} 90V
Emitter–Base Voltage, V_{EB} 4V
Collector Current, I_C 30A
Base Current, I_B 7.5A
Total Device Dissipation (T_C = +25°C), P_D 200W
Derate Above 25°C ..... 1.14W/°C
Operating Junction Temperature Range, T_J ..... –65° to +200°C
Storage Temperature Range, T_{stg} ..... –65° to +200°C
Thermal Resistance, Junction–to–Case, R_{thJC} ..... 0.875°C/W

Electrical Characteristics: (T_C =+25°C unless otherwise specified)

Parameter	Symbol	Test Conditions	Min	Typ	Max	Unit
OFF Characteristics						
Collector–Emitter Breakdown Voltage	$V_{(BR)CER}$	I_C = 200mA, R_{BE} = 100Ω, Note 1	100	–	–	V
Collector–Emitter Sustaining Voltage	$V_{CEO(sus)}$	I_C = 200mA, Note 1	90	–	–	V
Collector–Base Cutoff Current	I_{CBO}	V_{CB} = 100V, I_E = 0	–	–	1.0	mA
		V_{CB} = 100V, I_E = 0, T_C = +150°C	–	–	5.0	mA
Emitter–Base Cutoff Current	I_{EBO}	V_{BE} = 4V, I_C = 0	–	–	1.0	mA

Note 1. Pulse Test: Pulse Width ≤ 300μs. Duty Cycle ≤ 2%.

Electrical Characteristics (Cont'd): (T_C =+25°C unless otherwise specified)

Parameter	Symbol	Test Conditions	Min	Typ	Max	Unit
ON Characteristics (Note 1)						
DC Current Gain	h_{FE}	I_C = 7.5A, V_{CE} = 2V	25	–	100	
Base–Emitter ON Voltage	$V_{BE(on)}$	I_C = 7.5A, V_{CE} = 2V	–	–	1.3	V
Collector–Emitter Saturation Voltage	$V_{CE(sat)}$	I_C = 7.5A, I_B = 750mA	–	–	0.8	V
Base–Emitter Saturation Voltage	$V_{BE(sat)}$	I_C = 7.5A, I_B = 750mA	–	–	1.3	V
Dynamic Characteristics						
Current Gain–Bandwidth Product	f_T	I_C = 1A, V_{CE} = 10V, f = 1MHz	2.0	–	–	MHz

Note 1. Pulse Test: Pulse Width ≤ 300µs. Duty Cycle ≤ 2%.

Note 2. NTE181MP is a matched pair of NTE181 with their DC Current Gain (h_{FE}) matched to within 10% of each other.

Note 3. NTE180MCP is a matched complementary pair containing 1 each of NTE180 (PNP) and NTE181 (NPN).

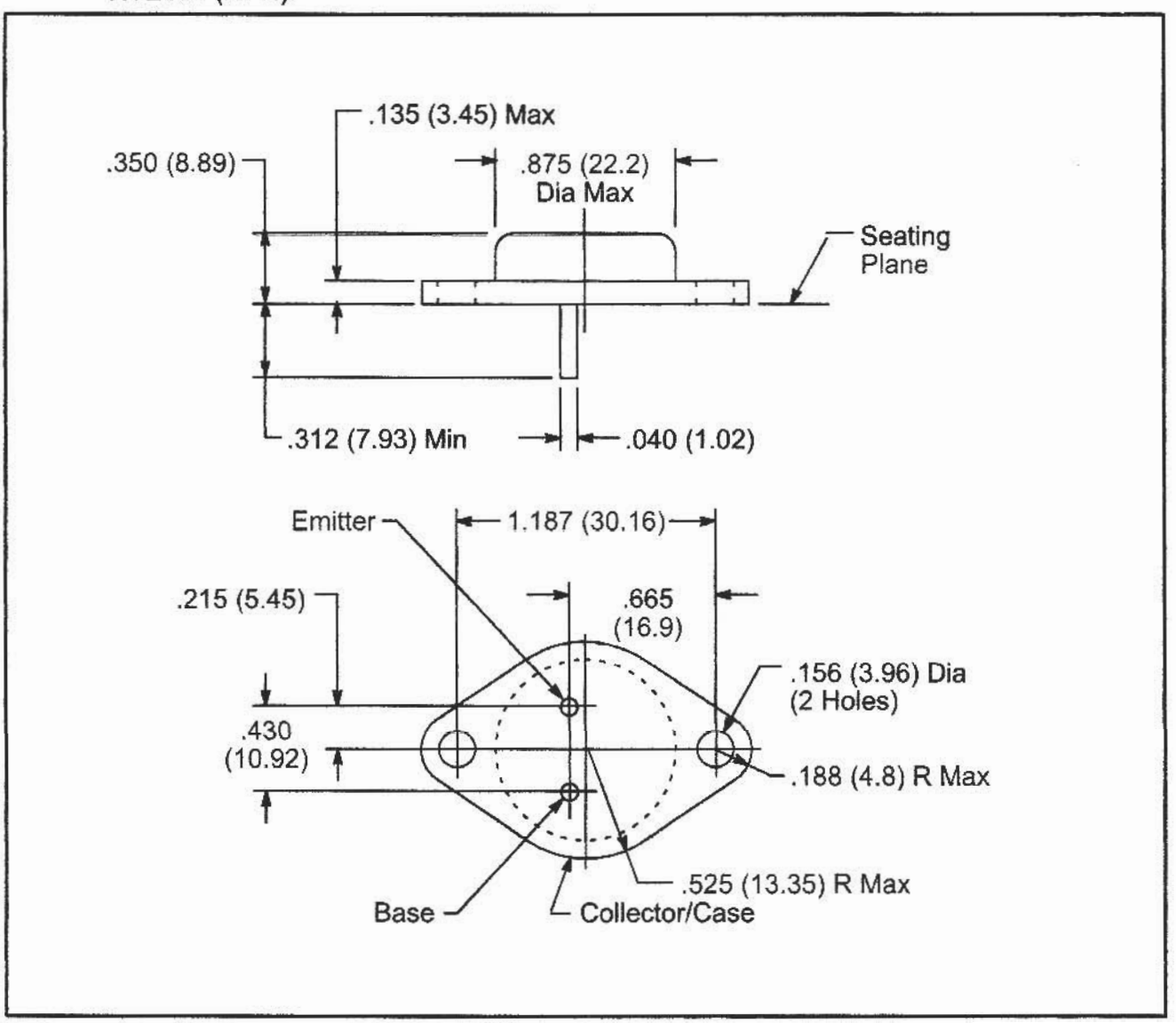

D1 1B2C1 - TOSHIBA (½ WAVE BRIDGE) GOOD X

Q5 2N5885 X

Q6 2N5885

Q4 2SB968(Q)

Q1 2SC2712(Y)

Q2 " "

Q3 " "

D5 RD7.5E(B2)

D4 1SS181

D6 1SS181

D101 S25VB10 - GOOD X

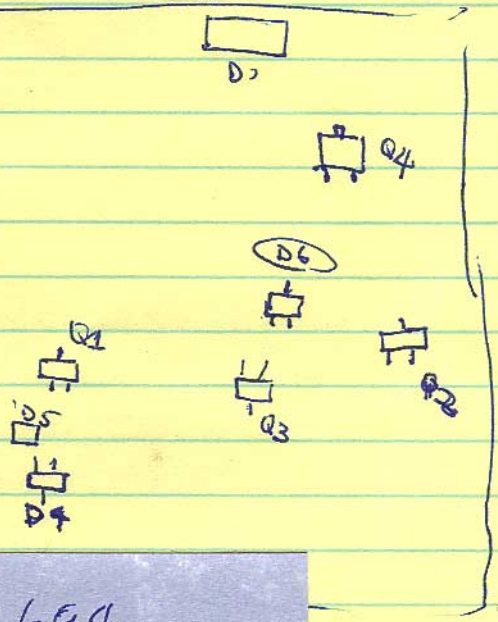

2SC2694
REPLACED BY
2SC2782
$32.00

ELECTRONICS, INC.
44 FARRAND STREET
BLOOMFIELD, NJ 07003
(973) 748–5089
http://www.nteinc.com

NTE352
Silicon NPN Transistor
RF Power Amp, Driver

Description:
The NTE352 is a 12.5V Class C epitaxial silicon NPN transistor in a W65 type package designed primarily for VHF, FM communications. Diffused emitter resistors provide high VSWR capability under rated operating conditions. Internal impedance matching ensures optimum power gain and efficiency over the 136–175MHz band.

Features:
- 175MHz
- 12.5 Volts
- P_{OUT} = 100 Watts
- G_P = 6.0dB Minimum
- Common Emitter Configuration

Absolute Maximum Ratings: (T_C = +25°C unless otherwise specified)
Collector–Base Voltage, V_{CBO} 36V
Collector–Emitter Voltage, V_{CEO} 18V
Collector–Emitter Voltage, V_{CES} 36V
Emitter–Base Voltage, V_{EBO} 4V
Collector Current (Peak), I_C 20A
Power Dissipation, P_D 270W
Operatin Junction Temperature, T_J . . . . . +200°C
Storage Temperature Range, T_{stg} . . . . . –65° to +150°C
Thermal Resistance, Junction–to–Case, R_{thJC} . . . . . 0.65°C/W

Electrical Characteristics: (T_C = +25°C unless otherwise specified)

Parameter	Symbol	Test Conditions	Min	Typ	Max	Unit
Static Characteristics						
Collector–Base Breakdown Voltage	$V_{(BR)CBO}$	I_C = 50mA, I_E = 0	36	–	–	V
Collector–Emitter Breakdown Voltage	$V_{(BR)CES}$	I_C = 100mA, V_{BE} = 0	36	–	–	V
	$V_{(BR)CEO}$	I_C = 100mA, I_B = 0	18	–	–	V
Emitter–Base Breakdown Voltage	$V_{(BR)EBO}$	I_E = 10mA, I_C = 0	4	–	–	V
Collector Cutoff Current	I_{CES}	V_{CE} = 15V, I_E = 0	–	–	15	mA
ON Characteristics						
DC Current Gain	h_{FE}	I_C = 5A, V_{CE} = 5V	10	75	150	

Electrical Characteristics (Cont'd): (T_C = +25°C unless otherwise specified)

Parameter	Symbol	Test Conditions	Min	Typ	Max	Unit
Dynamic Characteristics						
Output Power	P_{OUT}	V_{CC} = 12.5V, f = 175MHz, P_{IN} = 25W	100	–	–	W
Power Gain	G_{PE}		6.0	–	–	dB
Output Capacitance	C_{ob}	V_{CB} = 12.5V, f = 1MHz	–	–	390	pF
Impedance Data						
Input Impedance	Z_{IN}	f = 175MHz	1.5 – j0.9			Ω
Clamping Impedance	Z_{CL}	f = 175MHz	0.5 – j1.0			Ω

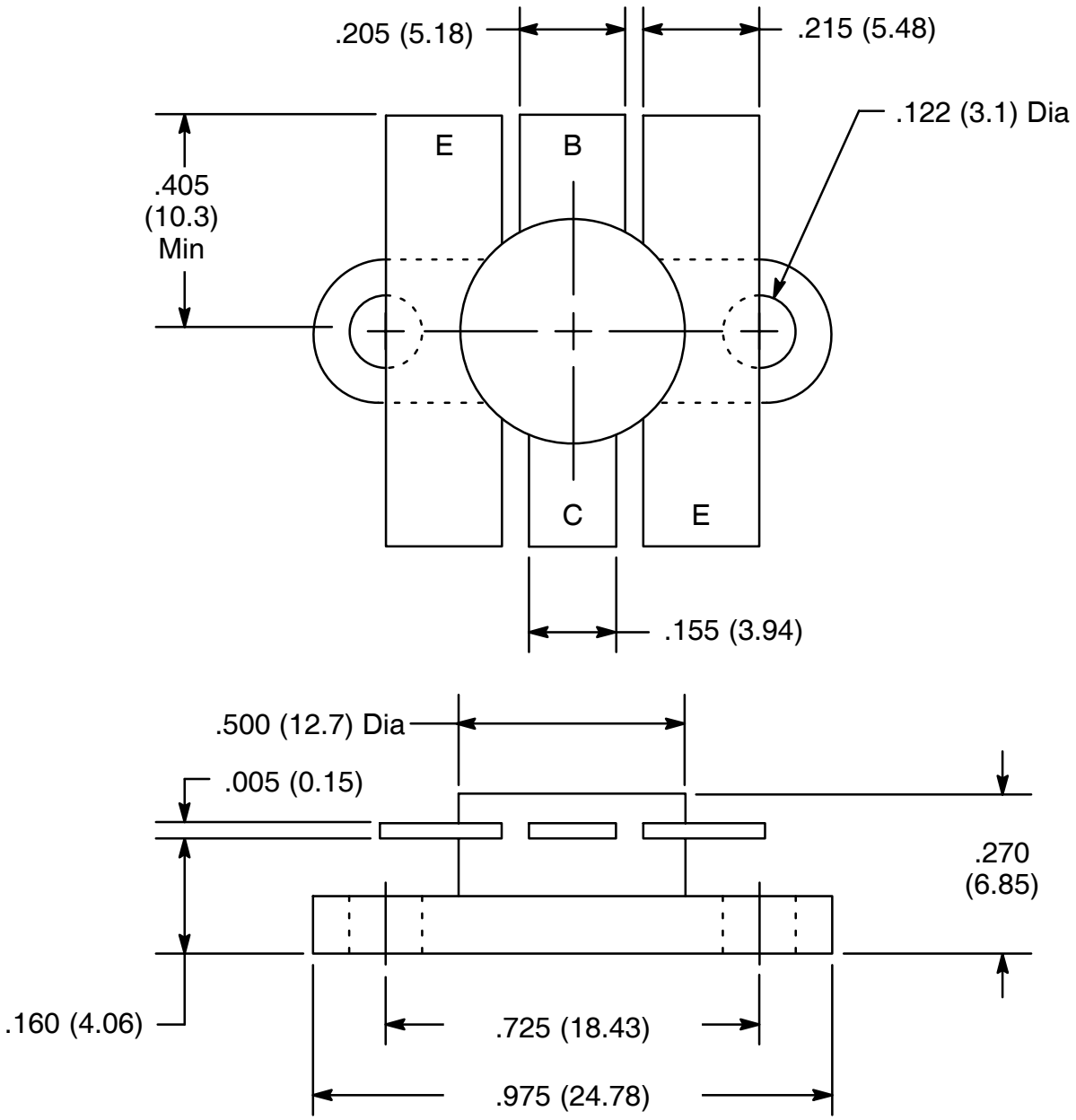

TOSHIBA TRANSISTOR SILICON NPN EPITAXIAL PLANAR TYPE

2SC2782

VHF BAND POWER AMPLIFIER APPLICATIONS

Unit in mm

- Output Power : Po = 80W (Min.)
  (f = 175MHz, V_{CC} = 12.5V, Pi = 18W)

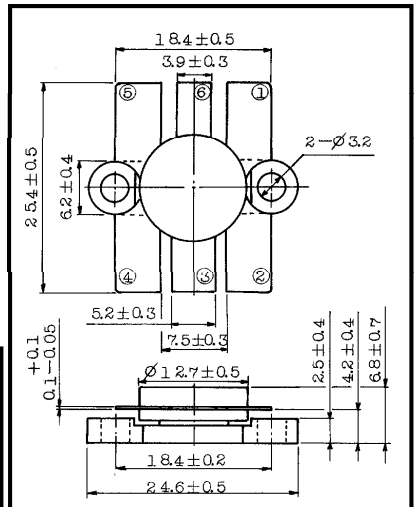

1. EMITTER 4. EMITTER
2. EMITTER 5. EMITTER
3. BASE 6. COLLECTOR

JEDEC	—
EIAJ	—
TOSHIBA	2-13C1A

Weight : 5.5g

MAXIMUM RATINGS (Tc = 25°C)

CHARACTERISTIC	SYMBOL	RATING	UNIT
Collector-Base Voltage	V_{CBO}	36	V
Collector-Emitter Voltage	V_{CEO}	16	V
Emitter-Base Voltage	V_{EBO}	4	V
Collector Current	I_C	20	A
Collector Power Dissipation	P_C	220	W
Junction Temperature	T_j	175	°C
Storage Temperature Range	T_{stg}	−65~175	°C

ELECTRICAL CHARACTERISTICS (Tc = 25°C)

CHARACTERISTIC	SYMBOL	TEST CONDITION	MIN.	TYP.	MAX.	UNIT
Collector-Base Breakdown Voltage	$V_{(BR)CBO}$	I_C = 20mA, I_E = 0	36	—	—	V
Collector-Emitter Breakdown Voltage	$V_{(BR)CEO}$	I_C = 50mA, I_B = 0	16	—	—	V
Emitter-Base Breakdown Voltage	$V_{(BR)EBO}$	I_E = 1mA, I_C = 0	4	—	—	V
DC Current Gain	h_{FE}	V_{CE} = 5V, I_C = 10A *	10	—	—	
Collector Output Capacitance	C_{ob}	V_{CB} = 12.5V, I_E = 0 f = 1MHz	—	—	320	pF
Output Power	Po	(Fig.)	80	90	—	W
Power Gain	G_p	V_{CC} = 12.5V, f = 175MHz	6.4	6.8	—	dB
Collector Efficiency	η_C	Pi = 18W	60	70	—	%
Series Equivalent Input Impedance	Z_{in}	V_{CC} = 12.5V f = 175MHz, Po = 80W	—	1.0 +j1.5	—	Ω
Series Equivalent Output Impedance	Z_{out}		—	1.2 +j1.8	—	Ω

* Pulse Test: Pulse Width ≦ 100μs, Duty Cycle ≦ 3%

CAUTION

Beryllia Ceramics is used in this product. The dust or vapor can be dangerous to humans.
Do not break, cut, crush or dissolve chemically. Dispose of this properly according to law. Do not intermingle with normal industrial or domestic waste.

961001EAA2

● TOSHIBA is continually working to improve the quality and the reliability of its products. Nevertheless, semiconductor devices in general can malfunction or fail due to their inherent electrical sensitivity and vulnerability to physical stress. It is the responsibility of the buyer, when utilizing TOSHIBA products, to observe standards of safety, and to avoid situations in which a malfunction or failure of a TOSHIBA product could cause loss of human life, bodily injury or damage to property. In developing your designs, please ensure that TOSHIBA products are used within specified operating ranges as set forth in the most recent products specifications. Also, please keep in mind the precautions and conditions set forth in the TOSHIBA Semiconductor Reliability Handbook.

Fig. Po TEST CIRCUIT

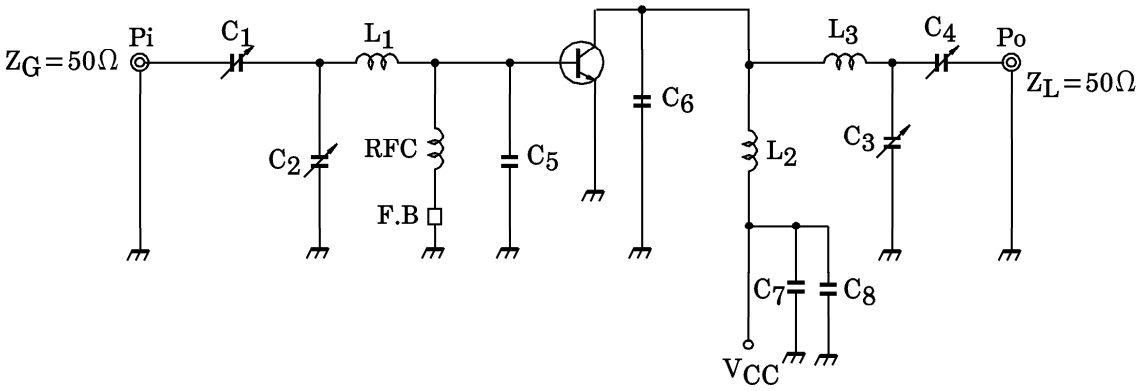

C_1~C_4	:	~20pF
C_5	:	156pF (39pF×4) CERAMIC CONDENSER
C_6	:	132pF (33pF×4) CERAMIC CONDENSER
C_7	:	0.01μF CERAMIC CONDENSER
C_8	:	10μF
L_1, L_3	:	ϕ1.5mm SILVER PLATED COPPER WIRE, 10ID, 1T
L_2	:	ϕ1.5mm SILVER PLATED COPPER WIRE, 10ID, 2T
RFC	:	ϕ1mm ENAMEL COATED COPPER WIRE, 6ID, 10T
FB	:	FERRITE BEAD

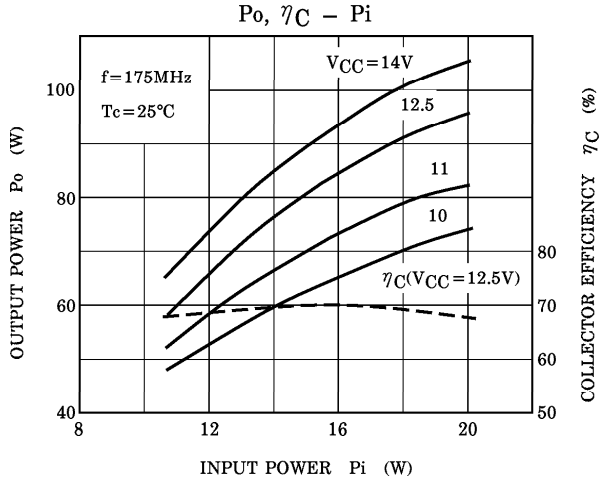

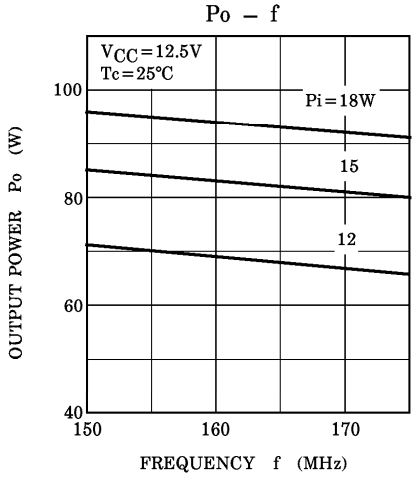

CAUTION

These are only typical curves and devices are not necessarily guaranteed at these curves.

961001EAA2'

● The information contained herein is presented only as a guide for the applications of our products. No responsibility is assumed by TOSHIBA CORPORATION for any infringements of intellectual property or other rights of the third parties which may result from its use. No license is granted by implication or otherwise under any intellectual property or other rights of TOSHIBA CORPORATION or others.
● The information contained herein is subject to change without notice.